Water Fittings and Deck Plate

Water Inlet Fitting

For Obtaining Water At Dockside

Material: Bronze Body with Black Polymer Watertight Plug and Stainless Steel Bead Chain
Finish: Chrome Plated
Connection: Standard Female Swivel Hose Connector
For Pipe Size: 1/2″ NPT
O.D. Flange: 2-3/4″
Screw Size: #8

Fig. 0499

Retail Pkg.	OEM Bulk Pkg.
0499DP0CHR	0499000CHR

Spare Plug with Chain: 0499DP099A.

PROP 65 WARNING (Contains Lead)

Water Outlet Fitting

For Use with On-Board Washdown Systems

Material: Bronze Body with Watertight Black Polymer Cap and Stainless Steel Bead Chain
Finish: Chrome Plated
Connection: Standard Male Hose Connector (MNT
For Pipe Size: 1/2″ NPT
O.D. Flange: 2-3/4″
Screw Size: #8

Fig. 0504

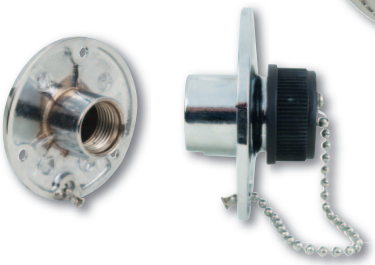

Retail Pkg.	OEM Bulk Pkg.
0504DP0CHR	0504000CHR

Spare Cap with Chain: 0504DP099A

PROP 65 WARNING (Contains Lead)

Regular Deck Plate

Material: Cast Bronze
Finish: Plain or Chrome Plated
Deck Plate Key: Included

Chrome

Plain

Fig. 0526

I.D. Opening	O.D. Overall	Plain Standard Pkg.	Chrome Plated Standard Pkg.	Screw Size
3″	5-3/8″	0526003PLB	0526003CHR	10
4″	7-1/16″	0526004PLB	0526004CHR	10
5″	8-3/8″	0526005PLB	0526005CHR	10
6″	9-3/8″	0526006PLB	0526006CHR	1/4″

Spare Parts Ordering Information

I.D. Opening	Plain Cap	Chrome Plated Cap	Spare Key Only
3″	0526P0399A	0526C0399A	1248010ZNC
4″	0526P0499A	0526C0499A	0539004PLB
5″	0526P0599A	0526C0599A	0539005PLB
6″	0526P0699A	0526C0699A	0539006PLB

PROP 65 WARNING (Contains Lead)

Cleats

Open Base Cleat

Material: Bronze
Finish: Chrome Plated

Fig. 0572

Length Overall	Dimensions Base	Max. Rope Size	Mounting Holes Center to Center	Retail Pkg.	Standard Pkg.	Screw Size
8″	4″ x 2-1/4″	3/4″	3.25″	0572DP8CHR	0572008CHR	1/4″
10″	5-1/16″ x 2-13/16″	7/8″	4.0″	----------	0572010CHR	5/16″
12″	6-1/16″ x 2-7/8″	1″	5.0″	----------	0572012CHR	5/16″
15″	7-3/8″ x 3-5/8″	1-1/2″	6.0″	----------	0572015CHR	3/8″

PROP 65 WARNING
(Contains Lead)

Open Base Cleat

Material: Zinc Alloy
Finish: Chrome Plated

Fig. 1188

Length Overall	Dimensions Base	Max. Rope Size	Mounting Holes Center to Center	Retail Pkg.	Standard Pkg.	Screw Size
4″	2-1/8″ x 1-1/2″	5/16″	1.5″	1188DP4CHR*	1188004CHR	10
6″	3″ x 1-3/4″	7/16″	2.25″	1188DP6CHR	1188006CHR	10
8″	4″ x 2-1/8″	5/8″	3.2″	1188DP8CHR	1188008CHR	1/4

* Sold in pairs.

Open & Closed Base Cleats

Material: Aluminum
Finish: Plain

Fig. 0545

Open Base

Base Style	Length Overall	Dimensions Base	Max. Rope Size	Retail Pkg.	OEM Bulk Pkg.	Screw Size
Closed	3″	1-1/2″ x 5/8″	1/4″	0545DP3ALU*	----------	8
Closed	4″	1-5/8″ x 3/4″	5/16″	0545DP4ALU*	----------	10
Closed	5″	2″ x 7/8″	3/8″	0545DP5ALU*	----------	1/4″
Closed	6″	2-1/4″ x 7/8″	7/16″	0545DP6ALU	0545006ALU	1/4″
Open	8″	2-5/8″ x 1-7/8″	5/8″	0545DP8ALU	0545008ALU	1/4″
Open	10″	3-5/8″ x 1-1/2″	3/4″	----------	0545010ALU	5/16″
Open	12″	4″ x 1-1/2″	7/8″	----------	0545012ALU	5/16″

*Sold in pairs.

Closed Base

Cleats

Streamline Closed Base Cleat

Material: Zinc Alloy
Finish: Chrome Plated

Fig. 0566

Length Overall	Dimensions Base	Max. Rope Size	Retail Pkg.*	Screw Size
2″	2-3/16″ x 1-1/8″	5/16″	0566DP2CHR	6
3″	3-1/8″ x 1-1/2″	3/8″	0566DP3CHR	8
4-1/2″	4-7/16″ x 1-7/8″	1/2″	0566DP4CHR	10

*Sold in pairs.

Open Base Cleat

Material: Zinc Alloy
Finish: Chrome Plated
Dimensions: Overall Length: 6-1/2″
Base: 3″ x 1-1/8″
Screw Size: 1/4″
Max. Rope Size: 3/4″

Fig. 1252

Retail Pkg.*	OEM Bulk Pkg.
1252DP0CHR	1252000CHR

*Sold in pairs.

Open Base Cleat

Material: Aluminum
Finish: Plain

Fig. 0530

Length Overall	Dimensions Base	Max. Rope Size	Standard Pkg.	Screw Size
8″	4 x 2″-1/4″	3/4″	0530008ALU	1/2″
10″	4-1/2″ x 3″	7/8″	0530010ALU	1/2″
12″	6-1/2″ x 2-7/8″	1″	0530012ALU	5/8″
15″	7″ x 3-1/4″	1-1/2″	0530015ALU	3/4″

Cleats

Open Base Cleat

Material: Zinc Alloy with Polymer Base
Finish: Chrome Plated with Black Base
Screw Size: 1/4″

Fig. 1326

Length Overall	Dimensions Base	Max. Rope Size	Retail Pkg.	OEM Bulk Pkg.
5-3/4″	3-5/8″ x 7/8″	1/2″	1326DP2CHR	1326002CHR

Open Base Cleat

Material: Zinc Alloy, Polymer Base with Stainless Steel Studs, Nuts, and Washers
Finish: Chrome Plated with Black Base

Fig. 1316

Length Overall	Max. Rope Size	Catalog Number	Stud Size
4-1/2″	3/8″	1316001CHR	12-24 x 1-1/2″
6″	1/2″	1316002CHR	1/4″ x 1-1/2″

Open Base Cleat

Material: Zinc Alloy with Polymer Base
Finish: Chrome Plated with Black Base

Fig. 1306

Length Overall	Max. Rope Size	Retail Pkg.	OEM Bulk Pkg.	Screw Size
4-1/2″	3/8″	1306DP1CHR*	1306001CHR	10
6″	1/2″	1306DP2CHR	1306002CHR	1/4″

*Sold in pairs.

Closed Base Cleat

Material: Zinc Alloy with Polymer Base
Finish: Chrome Plated with Black Base

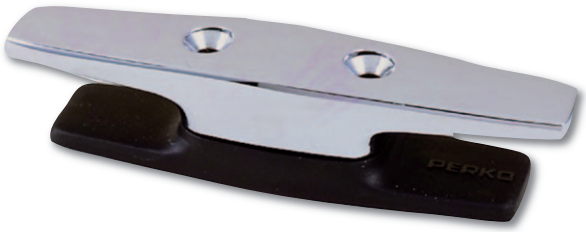

Fig. 1305

Length Overall	Max. Rope Size	Retail Pkg.	Screw Size
4-1/2″	3/8″	1305DP1CHR*	10
6″	1/2″	1305DP2CHR	1/4″

*Sold in pairs.

Chocks

Straight Chock

Material: Bronze
Finish: Chrome Plated

Fig. 0119

Max. Rope Size	Length Overall	Width	Retail Pkg.	OEM Bulk Pkg.	Screw Size
3/4″	4″	7/8″	0119DP4CHR	0119004CHR	8
1″	6″	1-1/8″	0119DP6CHR	0119006CHR	12

PROP 65 WARNING (Contains Lead)

Straight Chocks

Material: Zinc Alloy
Finish: Chrome Plated

Fig. 1230

Max. Rope Size	Length Overall	Width	Retail Pkg.	OEM Bulk Pkg.	Screw Size
3/4″	4″	7/8″	1230DP0CHR	1230000CHR	8

Sold in pairs.

Skene Bow Chocks

Port and Starboard Pair

Material: Zinc Alloy
Finish: Chrome Plated

Fig. 1223

Max. Rope Size	Length Overall	Width	Retail Pkg.	OEM Bulk Pkg.	Screw Size
1/2″	3-1/2″	7/8″	1223DP0CHR	1223000CHR	8

Sold in pairs (Port & Starboard).

Grab Rail Post, Rigging Tube, Mooring Bit, and Hawse Hole Plate

Grab Rail Posts

Hollow, For 1 Inch O.D. Tubing

Material:	Bronze
Finish:	Chrome Plated
Dimensions:	Height Overall: 3-3/8", O.D. Base: 2-1/2"
Screw Size:	#8

Type	Standard Pkg.
End Post	0380000CHR
Center Post	0380A00CHR

Fig. 0380
End Post

Fig. 0380A
Center Post

PROP 65 WARNING (Contains Lead)

Rigging Tube

For use with 2 Inch I.D. Hose to Pass Wiring Harnesses and Control Cables Through Transoms and Motorwell Bulkheads

Material:	Brass and Bronze
Finish:	Chrome Plated
Dimensions:	Length Overall: 4-1/8", O.D. Flange: 3-1/8" O.D. Tube: 2"
Screw Size:	#8
Mounting Hole:	Mounts in 2-1/8" Inch Diameter Hole

Retail Pkg.	OEM Bulk Pkg.
0357DP1CHR	0357001CHR

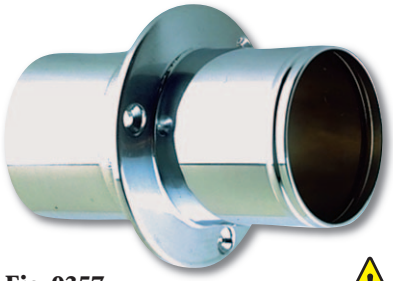

Fig. 0357

PROP 65 WARNING (Contains Lead)

Mooring Bit - Hollow

Material:	Bronze Body with Brass Pin
Finish:	Chrome Plated

Fig. 0608

Dimensions Base	Height	Standard Pkg.	Bolt Size
4-1/4" x 4-1/4"	3-1/2"	0608002CHR	1/4"
5" x 5"	4-3/4"	060802ACHR	3/8"
6" x 6"	5"	0608003CHR	3/8"

PROP 65 WARNING (Contains Lead)

Oval Hawse Hole Plate

Material:	Bronze
Finish:	Chrome Plated
Dimensions:	Outside: 4-1/4" x 6" Inside: 2-1/8" x 4-1/8" Spigot Length: 1-1/4"
Screw Size:	1/4"

Standard Pkg.
0752000CHR

Fig. 0752 Chrome

PROP 65 WARNING (Contains Lead)

Rope Deck Pipes, Step Plate, and Fixed Steps

Rope Deck Pipe

Material: High Impact, U.V. Stabilized, Fiber Reinforced Polymer
Finish: Black or White
Dimensions: O.D. Flange: 3-3/4"
Max. Rope Size: 7/8"
Screw Size: #8
Features
- Hinged, Snap-Down Cover
- Hinge Design Allows Open Cover to Lay Flat

Color	Retail Pkg.	OEM Bulk Pkg.
Black	1057DP0BLK	1057000BLK
White	1057DP0WHT	1057000WHT

Fig. 1057 White

Fig. 1057 Black

Rope Deck Pipe

Material: Zinc Alloy
Finish: Chrome Plated
Dimensions: O.D. Flange: 3-3/8"
Max. Rope Size: 1"
Screw Size: #8
Features: Hinged Cover

Retail Pkg.	OEM Bulk Pkg.
0757DP0CHR	0757000CHR

Fig. 0757

Step Plate

Material: Zinc Alloy Frame with Soft Polymer Pads
Finish: Chrome Plated Frame and Black Pad
Screw Size: #8

Dimensions	Retail Pkg.	OEM Bulk Pkg.
8-3/8" x 2-1/4"	1325DP0CHR	1325000CHR
8-3/4" x 3-1/4"	1325DP1CHR	1325001CHR

Sold in pairs.

Spare Pads for Size No. 0: 1050DP0BLK
Spare Pads for Size No. 1: 1050DP1BLK

PROP 65 WARNING (Contains DINP)

Fig. 1325

Fixed Steps and Handle

Material: Bronze
Finish: Chrome Plated
Bolt Size: 5/16 R.H.

Fig. 0501

Fig. 0351

Dimensions Step	Dimensions Bracket	Retail Pkg.	Standard Pkg.
6" x 4-1/4"	6" x 2"	0351DP0CHR	----------
11" x 4-1/2"	11" x 2"	----------	0501000CHR

PROP 65 WARNING (Contains Lead)

Handles

Bow Handle for Daysailers

Material: Zinc Alloy
Finish: Chrome Plated
Dimensions: Length Overall: 6-1/2″
Height Above Deck: 2″
Screw Size: #8

Retail Pkg.	OEM Bulk Pkg.
1234DP0CHR	1234000CHR

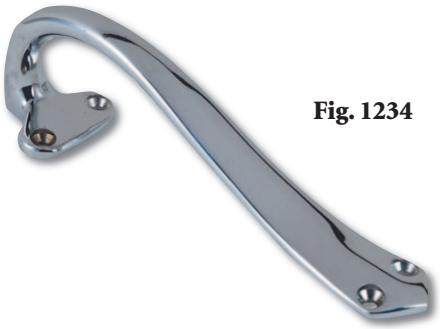

Fig. 1234

Handle

Material: Zinc Alloy, Polymer Base
Finish: Chrome Plated with Black Base
Dimensions: Length Overall: 6-1/4″, Length Inside: 3-1/2″
Height Inside: 1″
Screw Size: 1/4″

Retail Pkg.*	OEM Bulk Pkg.
1336DP0CHR	1336000CHR

*Sold in pairs.

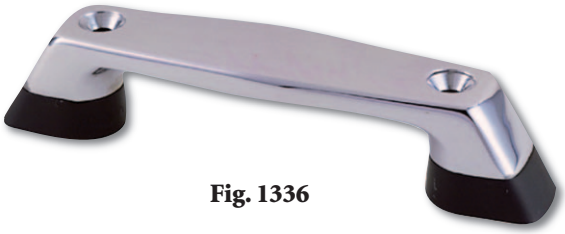

Fig. 1336

Handle

Material: Zinc Alloy, Polymer Base with Stainless Steel Studs, Nuts and Washers
Finish: Chrome Plated with Black Base
Dimensions: Length Overall: 6-1/4″, Length Inside: 3-1/2″
Height Inside: 1″
Stud Size: 1/4-20 x 1-1/2″

Standard. Pkg.
1346000CHR

Fig. 1346

Handle

Material: Zinc Alloy
Finish: Chrome Plated
Dimensions: Length Overall: 6″, Length Inside: 3-1/2″
Height Inside: 1-5/16″
Screw Size: 1/4″

Retail Pkg.*	OEM Bulk Pkg.
1231DP0CHR	1231000CHR

*Sold in pairs.

Fig. 1231

Handle

Material: Bronze
Finish: Chrome Plated
Dimensions: Length Overall: 4-1/4″, Length Inside: 2-1/2″
Height Inside: 7/8″
Screw Size: #6

Retail Pkg.*	OEM Bulk Pkg.
0775DP1CHR	0775001CHR

*Sold in pairs.

PROP 65 WARNING
(Contains Lead)

Fig. 0775

Fender Lock, Hook, Ring Buoy & Boat Hooks and Axe Bracket

Fender Lock

The Eye is to be Permanently Attached to the Fender Line.

Material: Zinc Alloy
Finish: Chrome Plated
Dimensions: I.D. Eye: 3/8", O.D. Flange: 1-1/2"
Screw Size: #8

Retail Pkg.*	OEM Bulk Pkg.
1299DP0CHR	1299000CHR

*Sold in pairs.

Fig. 1299

Snap-Type Fender Hook

Material: Zinc Alloy
Finish: Chrome Plated
Dimensions: Plate: 1-9/16" x 1-3/8"
Max. Rope Size: 1/4"
Screw Size: #6

Retail Pkg.*	OEM Bulk Pkg.
1309DP0CHR	1309000CHR

*Sold in pairs.

Fig. 1309

Ring Buoy Holder

Material: Brass
Finish: Chrome Plated
Dimensions: Width Mounting Plate: 3", Height Overall: 4-1/2"
Screw Size: #8

Retail Pkg.
1017DP0CHR

Fig. 1017

PROP 65 WARNING
(Contains Lead)

Boat Hook Holders

Material: Stainless Steel
Dimensions: Length: 3-1/2", Width: 1"
Max. Pole O.D.: 1-1/2"
Screw Size: #6

Retail Pkg.*	OEM Bulk Pkg.*
0492DP0STS	0492000STS

*Sold in pairs.

Fig. 0492

Axe Bracket

Material: Stainless Steel
For Blade Width: 6"
Screw Size: Bracket: #6, Socket: 10 R.H.

Retail Pkg.
0325000STS

Fig. 0325
Socket & Bracket

Rowlock Horns and Sockets

Rowlock Horns

Material: Zinc Alloy
Finish: Plain or Chrome Plated
Dimensions: O.D. Shank: 1/2"
Shank Length: 1-3/4"

Fig. 1262: Ribbed Open Type
Fig. 1267: Round Type
Fig. 1227: North River Type

Fig. 1262

Fig. 1267

Fig. 1227

Type	Finish	Between Horns	I.D. Horns	Retail Pkg.
Ribbed Open	Plain	1-3/4"	----------	1262DP0ZNC
Ribbed Open	Chrome	1-3/4"	----------	1262DP0CHR
Round Open	Plain	----------	2"	1267DP0ZNC
Round Open	Chrome	----------	2"	1267DP0CHR
North River	Plain	1-3/4"	----------	1227DP0ZNC
North River	Chrome	1-3/4"	----------	1227DP0CHR

Sold in pairs.

Rowlock Sockets

For Use with Figs. 1227, 1262, or 1267 Rowlock Horns

Material: Zinc Alloy with Polymer Bearing
Finish: Plain or Chrome Plated
Screw Size: #10

Fig. 1185: Top Mount
Fig. 1186: Edge Mount
Fig. 1187: Side Mount

Fig. 1185

Fig. 1186

Fig. 1187

Mount	Finish	Length	Width	Depth	Retail Pkg.*	OEM Bulk Pkg.*
Top	Plain	2-7/8"	1-1/8"	1-1/8"	1185DP0ZNC	1185000ZNC
Top	Chrome	2-7/8"	1-1/8"	1-1/8"	1185DP0CHR	1185000CHR
Edge	Plain	4"	7/8"	1-1/8"	1186DP0ZNC	----------
Edge	Chrome	4"	7/8"	1-1/8"	1186DP0CHR	----------
Side	Plain	4"	--------	1-1/4"	1187DP0ZNC	----------
Side	Chrome	4"	--------	1-1/4"	1187DP0CHR	----------

*Sold in pairs. Polymer Bearing: 1155000BLK.

Rowlock Horns and Sockets

Rowlock Horns

Material: Manganese Bronze
Finish: Plain
Dimensions: O.D. Shank: 1/2″
Shank Length: 2-1/8″

Fig. 0828: Ribbed Open Type
Fig. 0829: Round Type
Fig. 0830: North River Type

Fig. 0828

Fig. 0829

Fig. 0830

Type	Between Horns	I.D. Horns	Retail Pkg.
Ribbed Open	2″	----------	0828DP0PLB
Round	----------	2″	0829DP0PLB
Round	----------	2-1/4″	0829DP1PLB
North River	2-1/8″	----------	0830DP0PLB

Sold in pairs.

PROP 65 WARNING
(Contains Lead)

Rowlock Sockets

For Use with Figs. 0828, 0829, or 0830 Rowlock Horns

Material: Manganese Bronze
Finish: Plain
Screw Size: #10

Fig. 0831: Top Mount
Fig. 0832: Side Mount
Fig. 0833: Edge Mount

Fig. 0832

Fig. 0831

Fig. 0833

Mount	Length	Width	Depth	Retail Pkg.
Top	2-3/8″	7/8″	1″	0831DP0PLB
Side	3-5/8″	---	1-3/8″	0832DP0PLB
Edge	4″	3/4″	1-3/4″	0833DP0PLB

Sold in pairs.

PROP 65 WARNING
(Contains Lead)

Spring Clamps, Hatch Fastener/Windshield Keepers

Spring Clamps

Material: Stainless Steel
Screw Size: #6

Min. I.D.	Max. I.D.	Projection	Width Clamp	Retail Pkg.	OEM Bulk Pkg.
5/8″	1-1/4″	1-1/2″	1/2″	0502DP1STS	0502001STS
1″	1-3/4″	2-1/4″	5/8″	0502DP2STS	0502002STS

Sold in pairs.

Fig. 0502

Hatch Fastener or Windshield Keeper

Material: Brass and Zinc Alloy with Polymer Handle
Finish: Chrome Plated with Black Handle
Dimensions: Base: 1-1/2″ x 5/8″
Screw Size: #8

Retail Pkg.	OEM Bulk Pkg.
0769DP0CHR	0769000CHR

Spare Parts Ordering Information
Keeper: 076900099A
Handle with Stud: 076900099C

Fig. 0769

PROP 65 WARNING (Contains Lead)

Hatch Fastener or Windshield Keeper

Material: Brass and Zinc Alloy
Finish: Chrome Plated
Dimensions: Bracket: 1-1/2″ x 5/8″
Keeper: 1-1/2″ x 3/4″
Bolt Length: 1-1/2″
Screw Size: #8

Retail Pkg.
0697DP0CHR

Fig. 0697

PROP 65 WARNING (Contains Lead)

Hatch Fastener or Windshield Keeper

Material: Brass and Zinc Alloy with Phosphor Bronze Spring
Finish: Chrome Plated
Dimensions: Length Overall: 3-7/8″
Mounting Base: 1-1/2″ x 9/16″
Screw Size: #6

Retail Pkg.	OEM Bulk Pkg.
0155DP0CHR	0155000CHR

Fig. 0155

PROP 65 WARNING (Contains Lead)

Hatch Support Brace and Windshield Adjusters

Hatch Support Braces

Material: Brass
Finish: Chrome Plated
Screw Size: #8
Features: One End Angled Base, the Other End Flat Base

Fig. 0762

Port Side Shown

PROP 65 WARNING (Contains Lead)

Length Open	Retail Pkg.	OEM Bulk Pkg.
10″	0762DP1CHR	0762001CHR
12″	0762DP2CHR	0762002CHR
14″	0762DP3CHR	0762003CHR

Sold in pairs. (Port & Starboard)

Windshield Adjuster

Material: Brass and Zinc Alloy with Polymer Knob
Finish: Chrome Plated with Black Knob
Screw Size: #8

Fig. 1116

Length Rod	O.D. Rod	Retail Pkg.	OEM Bulk Pkg.
8″	3/8″	1116DP1CHR	1116001CHR
10″	3/8″	1116DP2CHR	1116002CHR
12″	3/8″	1116DP3CHR	1116003CHR

Knob: 1117DP0BLK

PROP 65 WARNING (Contains Lead)

Windshield Adjuster - Side or Offset Mounts

Material: Zinc Alloy with Polymer Knob
Finish: Chrome Plated with Black Knob
Dimensions: Length Overall: 12″
Adjustment Length: 9-1/2″
Screw Size: #8

Fig. 1290 Side Mount

Fig. 1291 Offset Mount

Mount	Retail Pkg.	OEM Bulk Pkg.
Side Mt.	1290DP0CHR	1290000CHR
Offset Mt.	1291DP0CHR	1291000CHR

Sold in pairs. (Port & Starboard)

NOTE: Illustrations are Port Side.

Spare Parts Ordering Information

Figure No.	Port Only	Starboard Only	Mounting Bracket With Knob	Knob Only
1290	1290P0099A	1290S0099A	129000099B	1292000BLK
1291	1291P0099A	1291S0099A	129100099B	1292000BLK

PROP 65 WARNING (Contains Lead)

Rope Clamps, Guides, Dock Line Spring, and Eye Straps

Rope Clamp

Material: Zinc Alloy
Finish: Chrome Plated
Dimensions: Length Overall: 1-1/4"
Width: 11/16"
Rope Size: 1/8" or 3/16"

Retail Pkg.*	OEM Bulk Pkg.
1226DP0CHR	1226000CHR

*Sold in pairs.

Fig. 1226

Rope Guides

Material: Zinc Alloy
Finish: Chrome Plated
Dimensions: I.D. Hole: 5/16"
Base: 1-1/4" x 3/4"
Screw Size: #6

Retail Pkg.*	OEM Bulk Pkg.
1256DP0CHR	1256000CHR
1261DP0CHR	1261000CHR

*Sold in pairs.

Fig. 1261

Fig. 1256

Dock Line Spring

Material: Galvanized Spring Steel
Dimensions: Length Overall: 10"
O.D.: 1-1/2"
Compression: 4-1/2"
For Rope Size: 1/2"

Standard Pkg.
0759001ZNC

Fig. 0759

Eye Strap

Material: 300 Series Stainless Steel
Dimensions: Length Overall: 1-5/8"
I.D. Eye: 1/4"
Screw Size: #10

Retail Pkg.*	OEM Bulk Pkg.
0562DP0STS	0562000STS

*Sold 5 pcs. per card.

Fig. 0562

Eye Strap

Material: Zinc Alloy
Finish: Chrome Plated
Dimensions: Length Overall: 1-7/8"
I.D. Eye: 5/16"
Screw Size: #8

Retail Pkg.*	OEM Bulk Pkg.
1242DP0CHR	1242000CHR

*Sold 5 pcs. per card.

Fig. 1242

Hold-Down Clamps

Lockable Hold-Down Clamps

Material: Bronze
Finish: Chrome Plated
Features:
- All mounting holes covered in closed position
- Lockable

Fig. 0771:
- Adjustable "U" bolt, (custom lengths available)
- Flat Mounting
- Great for locking dock boxes

Fig. 1008:
- Flat Mounted with all mounting holes covered in closed position

Fig. 1108:
- Flat Mounted

Fig. 0771

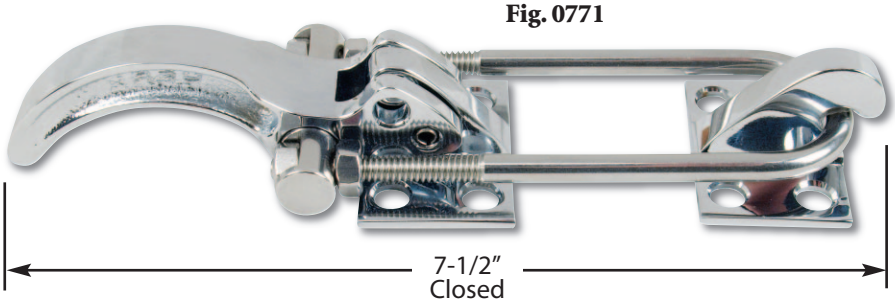

Fig. 1008
Open

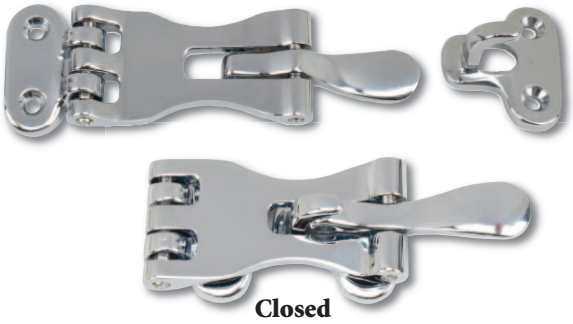

Fig. 1108
Open

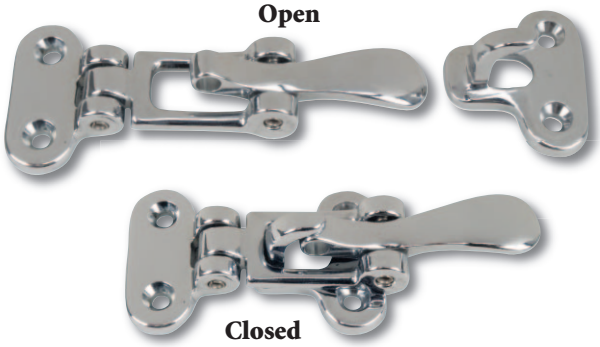

Adjustable Range	Closed Length	Width	Screw Size	Max. Padlock Shank	Retail Pkg.	OEM Bulk Pkg.
1-11/16"	7-1/2"	2"	10	Up to 5/16"	0771DP0CHR	0771000CHR
----------	4-1/2"	1-3/4"	8	1/4"	1008DP0CHR	1008000CHR
----------	4-1/2"	1-3/4"	6	1/4"	1108DP0CHR	1108000CHR

PROP 65 WARNING
(Contains Lead)

Hold-Down Clamps - Flat Mount or Right Angle Mount

Material: Bronze
Finish: Chrome Plated
Screw Size: #8

Fig. 1112

Fig. 1113

Mount	Length	Width	Retail Pkg	OEM Bulk Pkg.
Flat	3"	1-1/2"	1112DP0CHR	1112000CHR
Right Angle	2-1/2"	1-1/2"	1113DP0CHR	1113000CHR

PROP 65 WARNING
(Contains Lead)

Hasps

Hasp with Swivel Eye

Padlock Eye Swivels to Act as a Latch

Material: Zinc Alloy
Finish: Chrome Plated
Padlock Clearance: 11/32″
Screw Size: #6

Fig. 1194

Length Closed	Width Overall	Retail Pkg.	OEM Bulk Pkg.
3″	1″	1194DP0CHR	1194000CHR

Spare Parts Ordering Information
Keeper: 1194DP099A

Hasp

Material: Bronze
Finish: Chrome Plated
Padlock Clearance: 9/32″
Screw Size: #6

Fig. 0998

PROP 65 WARNING (Contains Lead)

Length Closed	Width Overall	Retail Pkg.	OEM Bulk Pkg.
2″	1″	0998DP1CHR	0998001CHR
3″	1″	0998DP2CHR	0998002CHR

Spare Parts Ordering Information
Chrome Keeper: 0959DP0CHR

Hasp

Material: Zinc Alloy
Finish: Chrome Plated
Padlock Clearance: 1/4″
Screw Size: #6

Fig. 1198

Length Closed	Width Overall	Retail Pkg.	OEM Bulk Pkg.
2″	1″	1198DP1CHR	1198001CHR
3″	1″	1198DP2CHR	1198002CHR
3-3/4″	1″	1198DP3CHR	1198003CHR

Spare Parts Ordering Information
Keepers: 1261DP0CHR

Butt Hinges

Butt Hinges with Fast Pin

Material: Heavy Gauge Extruded Brass
Finish: Chrome Plated
No. of Holes: 6

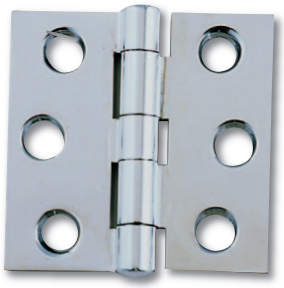

Fig. 1002

Height Pin	Width Open	Retail Pkg.	Standard Pkg.	Screw Size
2″	2″	1002004DP	1002004CHR	6
3″	2″	1002007DP	1002007CHR	8
3″	3″	1002009DP	1002009CHR	10
4″	3″	1002012DP	1002012CHR	10

Sold in pairs.

PROP 65 WARNING (Contains Lead)

Heavy Duty Butt Hinges with Removable Pin

Material: Extruded Brass
Finish: Chrome Plated
Screw Size: 1/4″
No. of Holes: 6
Features: Extra Heavy Duty Polymer Bearings for Smooth Operation

Fig. 1004

Height Pin	Width Open	Retail Pkg.	OEM Bulk Pkg.
4″	4″	1004DP0CHR	1004000CHR

Sold in pairs.

PROP 65 WARNING (Contains Lead)

Butt Hinges with Removable Pin

Material: Heavy Gauge Stamped Brass or Stainless Steel
Finish: Chrome Plated or Polished
No. of Holes: 6

Fig. 0952

Finish	Height Pin	Width Open	Retail Pkg.	OEM Bulk Pkg.	Screw Size
Chrome	2-1/2″	2″	0952DP5CHR	0952005CHR	8
Polished SS	2-1/2″	2″	0952DP5STS	0952005STS	8
Chrome	3″	3″	0952DP9CHR	0952009CHR	10
Polished SS	3″	3″	0952DP9STS	0952009STS	10

Sold in pairs.

PROP 65 WARNING (Contains Lead)

Butt Hinges with Fast Pin

Material: Heavy Gauge Stamped Brass or Stainless Steel
Finish: Chrome Plated or Polished
No. of Holes: 4

Fig. 0949

Finish	Height Pin	Width Open	Retail Pkg.	Screw Size
Chrome	1-1/2″	1-1/2″	0949DP2CHR	6
Polished SS	1-1/2″	1-1/2″	0949DP2STS	6

Sold in pairs.

PROP 65 WARNING (Contains Lead)

Hinges

Butt Hinges with Removable Pin

Material: Zinc Alloy
Finish: Chrome Plated

Height Pin	Width Open	Retail Pkg.	OEM Bulk Pkg.	Screw Size	No. of Holes
1-1/2″	1-1/2″	1293DP2CHR	----------	8	4
2″	1-1/2″	1293DP3CHR	----------	8	4
2″	2″	1293DP4CHR	1293004CHR	8	4
2-1/2″	2″	1293DP5CHR	1293005CHR	8	6
2-1/2″	2-1/2″	1293DP6CHR	1293006CHR	8	6
3″	3″	1293DP9CHR	1293009CHR	10	6

Sold in pairs.

Fig. 1293

Sizes 2, 3, & 4

Sizes 5, 6, & 9

Butt Hinge with Fixed Pin

Material: Zinc Alloy
Finish: Chrome Plated
Dimensions: Height Pin: 1-1/2″
Width Open: 1-1/2″
Screw Size: #8

Retail Pkg.	OEM Bulk Pkg.
0941DP0CHR	0941000CHR

Sold in pairs.

Fig. 0941

Hinge with Fixed Pin

Material: Bronze
Finish: Chrome Plated
Dimensions: Height Pin: 1-1/2″
Screw Size: #8

Width Open	Retail Pkg.	OEM Bulk Pkg.
3″	0951DP1CHR	0951001CHR
4″	0951DP2CHR	0951002CHR

Sold in pairs.

Fig. 0951

PROP 65 WARNING
(Contains Lead)

Hinge with Fixed Pin

Material: Zinc Alloy
Finish: Chrome Plated
Dimensions: Height Pin: 1-1/2″
Width Open: 3″
Screw Size: #8

Retail Pkg.	OEM Bulk Pkg.
0808DP0CHR	0808000CHR

Sold in pairs.

Fig. 0808

Hinges

Shortside Hinges with Fixed Pin

Material: Fig. 0987: Bronze
Fig. 1213: Zinc Alloy
Finish: Chrome Plated
Pin Height: 1-1/2″
Screw Size: #8

Width Open	Width Shortside	Retail Pkg.	OEM Bulk Pkg.
2-1/4″	3/4″	0987DP1CHR	0987001CHR
2-3/4″	3/4″	0987DP2CHR	----------
2-1/4″	3/4″	1213DP1CHR	1213001CHR

Sold in pairs.

Fig. 0987
Chrome Plated Bronze

Fig. 1213
Chrome Plated Zinc Alloy

PROP 65 WARNING (Contains Lead)

Fig. 0987

Offset Shortside Hinge with Fixed Pin

Material: Fig. 0988: Bronze
Fig. 1214: Zinc Alloy
Finish: Chrome Plated
Pin Height: 1-1/2″
Offset: 3/8″
Screw Size: #8

Width Open	Width Shortside	Retail Pkg.
2-1/4″	3/4″	0988DP1CHR
2-3/4″	3/4″	0988DP2CHR
2-1/2″	3/4″	1214DP1CHR

Sold in pairs.

Fig. 0988
Chrome Plated Bronze

Fig. 1214
Chrome Plated Zinc Alloy

PROP 65 WARNING (Contains Lead)

Fig. 0988

Shortside Hinge with Fixed Pin

Material: Bronze
Finish: Chrome Plated
Pin Height: 1-1/2″
Screw Size: #8

Width Open	Width Shortside	Retail Pkg.
3-1/2″	1-1/2″	0999DP0CHR

Sold in pairs.

Fig. 0999

PROP 65 WARNING (Contains Lead)

Offset Hinge with Fixed Pin

Material: Zinc Alloy
Finish: Chrome Plated
Pin Height: 1-1/2″
Screw Size: #8

Width Open	Width Shortside	Retail Pkg.	OEM Bulk Pkg.
1-1/2″	3/8″	0942DP0CHR	0942000CHR

Sold in pairs.

Fig. 0942

Hinges

Inset and Flush Hinges - Semi Concealed with Fixed Pin

Material: Stamped Brass
Finish: Chrome Plated
Screw Size: #4
Features: Fig 0271: for 3/8" inset doors
Fig 0272: for overlay doors

Fig. 0271

Fig. 0272

Dimensions	Retail Pkg.	OEM Bulk Pkg.
2-3/4" x 2-1/2"	0271DP0CHR	0271000CHR
2-3/4" x 1-7/8"	0272DP0CHR	0272000CHR

Sold in pairs.

PROP 65 WARNING (Contains Lead)

Strap Hinge with Fixed Pin

Material: Bronze
Finish: Chrome Plated

Fig. 0120

Width Open	Height Pin	Retail Pkg.	Screw Size	No. of Holes
4"	1-1/8"	0120DP1CHR	10	4
6"	1-1/8"	0120DP2CHR	10	6
8"	1-3/8"	0120DP3CHR	12	6

Sold in pairs.

PROP 65 WARNING (Contains Lead)

"T" Hinge

Material: Bronze
Finish: Chrome Plated
Pin Type: Sizes 1 & 3: Fixed
Size 2: Removable Roll Pin

Fig. 0197

Width Open	Height Overall	Width "T" Side	Retail Pkg.	Screw Size	No. of Holes
4"	2-1/8"	1-5/16"	0197DP1CHR	10	6
6"	3"	1-1/2"	0197DP2CHR	10	7
8"	3-7/8"	2"	0197DP3CHR	12	8

Sold in pairs.

PROP 65 WARNING (Contains Lead)

Hinges and Hatch Trim

Non-Mortised Hinge with Fixed Pin

Easily Installs Without Mortising

Material:	Stamped Brass or Stainless Steel
Finish:	Chrome Plated or Polished
Dimensions:	Width Closed: 7/8"
Height Pin:	3-3/8"
Screw Size:	#8

Fig. 0957

Finish	Retail Pkg.	OEM Bulk Pkg.
Chrome	0957DP0CHR	0957000CHR
Polished SS	0957DP0STS	0957000STS

Sold in pairs.

PROP 65 WARNING (Contains Lead)

Pull Apart Hinges - Left and Right Hand

Use 2 Left Hand or 2 Right Hand For Quick Removal of Hatches, Motor Covers, etc. or Together (1 each Left & Right) as a Heavy Duty Hinge Set.

Material:	Bronze
Finish:	Chrome Plated
Dimensions:	Length Open: 3-3/4"
	Width Overall: 2"
Screw Size:	#10

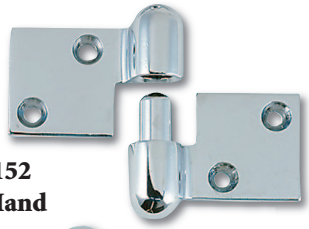

Fig. 0152
Right Hand

Fig. 0149
Left Hand

Type	Retail Pkg.	OEM Bulk Pkg.
Left Hand	0149DP0CHR	0149000CHR
Right Hand	0152DP0CHR	0152000CHR

PROP 65 WARNING (Contains Lead)

Continuous Hinge and Hatch Trim

Material:	Stainless Steel
Finish:	Polished
Features:	• Holes are two inches apart, center to center
	• Fig 0212 - has countersunk holes

Fig. 0212

Fig. 0258

Continuous Hinge

Width Open	Retail Pkg. One 24" Lgth.	Standard Pkg. in 72" Lengths	Screw. Size
1-1/4"	0212DP2STS	0212002STS	5
1-1/2"	0212DP4STS	0212004STS	5

Hatch Trim

Width	Length Overall	Standard Pkg.	Screw Size
1-1/4"	72"	0258002STS	6
1-1/2"	72"	0258004STS	6

Barrel Bolts

Slim Barrel Bolt

Material: Zinc Alloy
Finish: Chrome Plated
Dimensions: Length: 3-3/4", Width: 3/4"
Screw Size: #6
Features:
- Fig. 1353: Visible Fasteners
- Fig. 1354: Hidden Fasteners
- Integral Friction Pad Eliminates Rattle and Provides Smooth Operation.

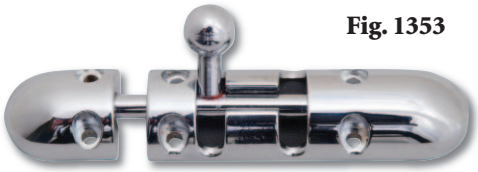

Fig. 1353

Fig. 1354

Type	Retail Pkg.	OEM Bulk Pkg.
Visible Fasteners	1353DP0CHR	1353000CHR
Hidden Fasteners	1354DP0CHR	1354000CHR

PROP 65 WARNING (Contains Lead)

Barrel Bolt

Material: Zinc Alloy
Finish: Chrome Plated
Dimensions: Length: 3-3/8", Width: 1-1/4"
Screw Size: #6 R.H.
Features: Integral Friction Pad Eliminates Rattle and Provides Smooth Operation.

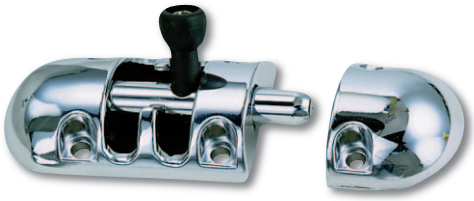

Fig. 1244

Retail Pkg.	OEM Bulk Pkg.
1244DP0CHR	1244000CHR

PROP 65 WARNING (Contains Lead)

Barrel Bolt

Material: Bronze Body with either Bronze Keeper or High Impact Black Nylon Bulkhead Keeper
Finish: Chrome Plated
Bolt Diameter: 3/8"
Screw Size: #6
Features:
- Integral Friction Pad Eliminates Rattle and Provides Smooth Operation.
- Bulkhead Keeper Easily Installs in a 5/8" Hole
- Retail package includes both styles of keepers

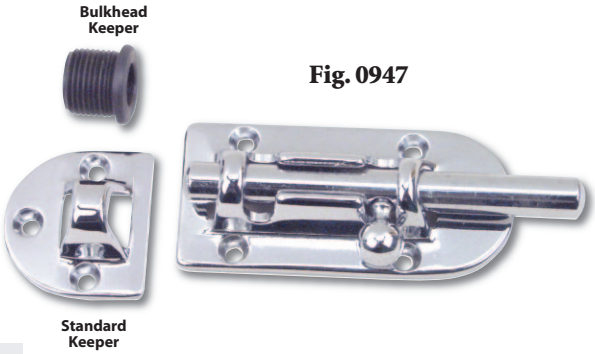

Fig. 0947

Dimensions Overall	Retail Pkg.	OEM Bulk Pkg. Std. Keeper	OEM Bulk Pkg. Bulkhead Keeper
3-7/16" x 1-7/16"	0947DP1CHR	0947001CHR	0947B01CHR
4-5/16" x 1-7/16"	0947DP2CHR	0947002CHR	0947B02CHR
5-1/4" x 1-7/16"	0947DP3CHR	0947003CHR	0947B03CHR

PROP 65 WARNING (Contains Lead)

Extra long barrel options are available. Contact the factory for more information

Extra Long Barrel Bolt with 2-1/2" Throw (Shown Open)

Extra Long Barrel Bolt with 2-1/2" Throw (Shown Closed)

Ship Bolt and Cabin Door Hooks

Ship Bolt

Material: Bronze
Finish: Chrome Plated
Dimensions: Length: 2-5/8", Width: 1-1/4"
Screw Size: #6
Features: Includes Brass Friction Spring to Eliminate Rattle and Provide Detented Operation

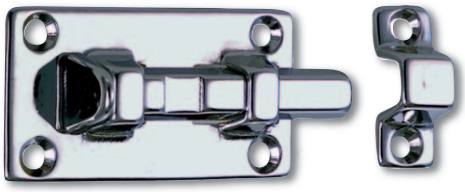

Fig. 1053

Retail Pkg.	OEM Bulk Pkg.
1053DP0CHR	1053000CHR

PROP 65 WARNING (Contains Lead)

Cabin Door Hook

Material: Bronze
Finish: Plain or Chrome Plated
Screw Size: #6

Fig. 0956

Length Hook	Chrome Plated Retail Pkg.	Chrome Plated OEM Bulk Pkg.	Plain Standard
1-1/2"	0956DP1CHR	0956001CHR	0956001PLB
2"	0956DP2CHR	0956002CHR	0956002PLB
2-1/2"	0956DP3CHR	0956003CHR	0956003PLB
3"	0956DP4CHR	0956004CHR	0956004PLB
3-1/2"	0956DP5CHR	----------	0956005PLB
4"	0956DP6CHR	0956006CHR	0956006PLB
5"	0956DP7CHR	0956007CHR	0956007PLB
6"	0956DP8CHR	0956008CHR	0956008PLB

Spare Parts Ordering Information
Bronze Keepers (2 per card): 0959DP0PLB
Chrome Keepers (2 per card): 0959DP0CHR
Chrome Keepers OEM Bulk (100 pcs.): 0959000CHR

PROP 65 WARNING (Contains Lead)

Cabin Door Hook

Material: Zinc Alloy
Finish: Chrome Plated
Screw Size: #6

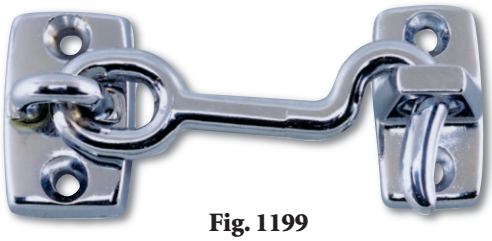

Fig. 1199

Length Hook	Retail Pkg.	OEM Bulk Pkg.
1-3/4"	1199DP1CHR	1199001CHR
2-1/4"	1199DP2CHR	1199002CHR
3"	1199DP3CHR	1199003CHR
4"	1199DP4CHR	1199004CHR

Spare Parts Ordering Information
Keepers (2 per card): 1261DP0CHR

Cabin Door Hook

Material: Zinc Alloy
Finish: Chrome Plated
Screw Size: #6

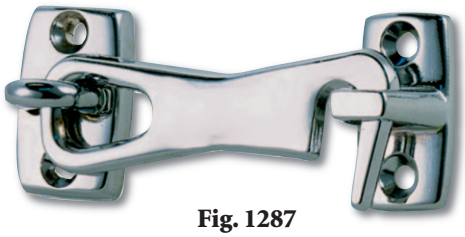

Fig. 1287

Length Hook	Retail Pkg.	OEM Bulk Pkg.
2"	1287DP1CHR	1287001CHR
2-1/2"	1287DP2CHR	1287002CHR
3"	1287DP3CHR	1287003CHR

Spare Parts Ordering Information
Keepers (2 per card): 1261DP0CHR

Door Stops, Holder, and Buttons

Door Stop and Holder

Material: Bronze with Rubber Bumper
Finish: Chrome Plated
Screw Size: Door Stop: #8
Keeper: #6

Fig. 0574

PROP 65 WARNING (Contains Lead & DINP)

Length	O.D.	Retail Pkg.	OEM Bulk Pkg.
2-3/8″	1-3/4″	0574DP1CHR	0574001CHR
3-1/4″	1-3/4″	0574DP2CHR	0574002CHR

Door Stop

Material: Zinc Alloy with Rubber Bumper
Finish: Chrome Plated
Screw Size: #4

Fig. 1177

PROP 65 WARNING (Contains DINP)

Length	O.D.	Retail Pkg.	OEM Bulk Pkg.
1″	1-1/4″	1177DP0CHR	1177000CHR

Door Holder

Material: Stainless Steel Clip, Zinc Alloy Arrow
Finish: Chrome Plated
Screw Size: #8

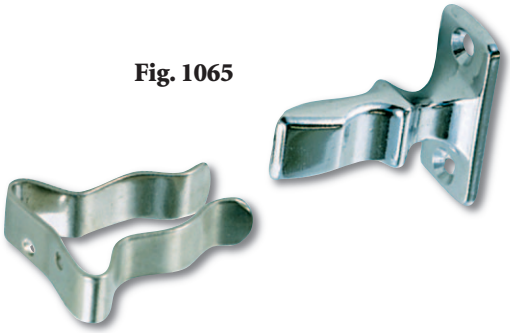

Fig. 1065

Dimensions Arrow Base	Dimensions Clip Base	Projection	Retail Pkg.
1-5/8″ x 3/4″	1-3/8″ x 7/16″	1-3/4″	1065DP0CHR

Door Buttons

Material: Zinc Alloy with Black Polymer Button
Finish: Chrome Plated
Screw Size: #6
Features: Fig. 1216: Supplied with Phosphor Bronze Tension Spring
Fig. 1217: Supplied without Spring and Requires a No. 4 Oval-Head Pivot Screw

Fig. 1216

Fig. 1217

Type	O.D. Overall	Retail Pkg.	OEM Bulk Pkg.
With Spring	1-3/4″	1216DP0CHR	1216000CHR
w/o Spring	1-3/4″	1217DP0CHR	1217000CHR

Spare Parts Ordering Information
Button for Both: 121600099A.

Door Catches and Slam Cam Bar

Door Catch

Material:	Polymer with Stainless Steel Mounting & Keeper Screws
Finish:	White
Screw Size:	3/4" x #8
Dimensions:	1-1/4" x 5/8"

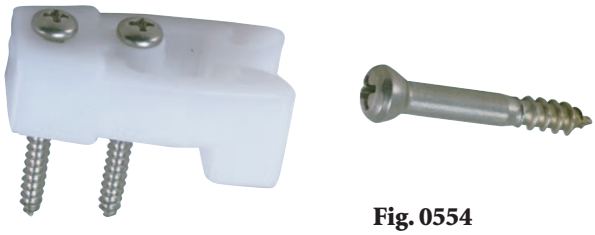

Fig. 0554

Retail Pkg.	OEM Bulk Pkg.
0554DP	0554

Door Catch

Material:	Polymer
Finish:	Black
Screw Size:	#4 R.H.
Dimensions:	Stud: 1-1/8" x 3/8" Catch: 1-3/8" x 7/8"

Fig. 0559

Retail Pkg.	OEM Bulk Pkg.
0559DP	0559

Slam Cam Bar with Emergency Hatch Release

Material:	Zinc-Alloy with Polymer Release Knob and Strike
Finish:	Chrome Plated Body, Black Strike
Screw Size:	#10-24
Dimensions:	Length: 3-1/2"
Adjustments:	
See Diagram	(A) Strike Box: Horizontal - 5/16" (B) Strike Box: Vertical - 1/2" (C) Cam Bar: Vertical - 1" (D) Cam Bar: Lateral - 9/16"

Retail Pkg.	OEM Bulk Pkg.
1075DP7CHR	1075007CHR

Cam Bar Adjustment Diagram

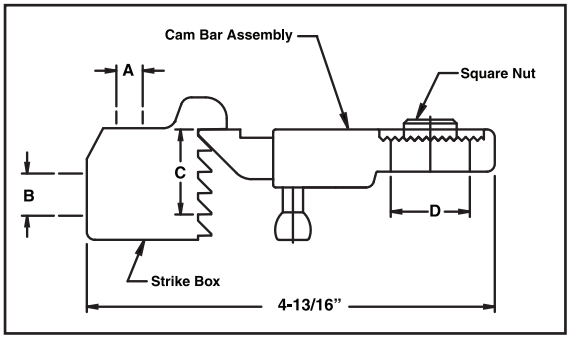

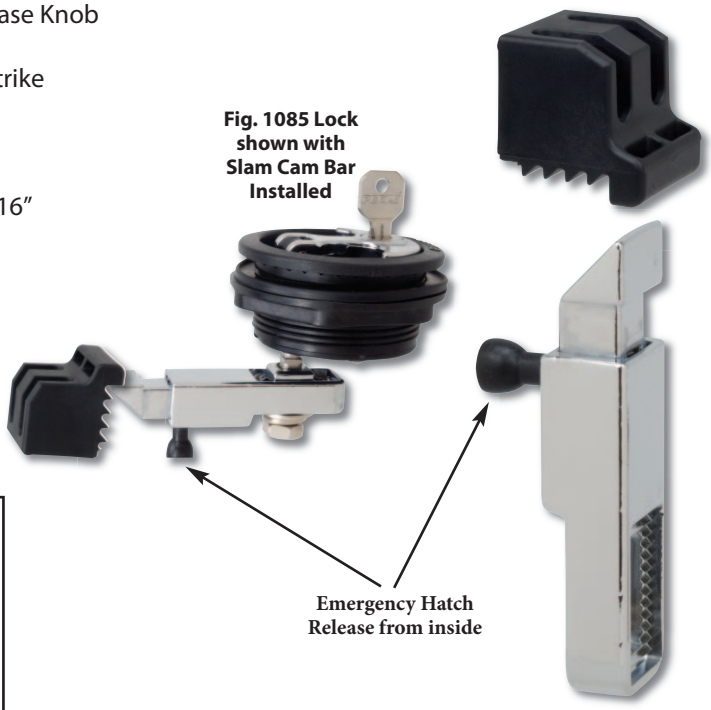

Fig. 1085 Lock shown with Slam Cam Bar Installed

Fig. 1075

"T" Handle Lock with Draw-Down Cam Bar

Surface Mount "T" Handle Lock with Draw-down Cam Bar

Pushing the handle down pulls the cam bar up

Material:	Polymer Body with Zinc Alloy "T" Handle and Stainless Steel Stem
Finish:	Black, White or Ivory Body with Chrome Plated "T" Handle
Draw-Down:	1/4"
Installation:	Mounting Hole Diameter: 2-1/2" Face Plate Diameter: 3" For Mounting Surfaces: 1/8" to 3/4"
Features:	• Gasket Included for Smooth Surface Applications • Handle does not lay flat in open, unlocked position

NEW PRODUCT

Fig. 1086
shown with No. 5
Extra Long Cam Bar

Body Color	Adjustment Cam Bar	OEM Bulk Pkg.	Retail Pkg.
Black	3/4" to 2-3/8"	1086001BLK	1086DP1BLK
Black	1-1/4" to 1-7/8"	1086003BLK	1086DP3BLK
Black	1/2" to 3"	1086004BLK	1086DP4BLK
Black	1-1/4" to 2"	1086005BLK	1086DP5BLK
Black	1-1/8" to 2"	1086006BLK	1086DP6BLK
Black	See Page R•153	1086007BLK	1086DP7BLK
White	3/4" to 2-3/8"	1086001WHT	1086DP1WHT
White	1-1/4" to 1-7/8"	1086003WHT	1086DP3WHT
White	1/2" to 3"	1086004WHT	1086DP4WHT
White	1-1/4" to 2"	1086005WHT	1086DP5WHT
White	1-1/8" to 2"	1086006WHT	1086DP6WHT
White	See Page R•153	1086007WHT	1086DP7WHT
Ivory	3/4" to 2-3/8"	1086001IVR	----------
Ivory	1-1/4" to 1-7/8"	1086003IVR	----------
Ivory	1/2" to 3"	1086004IVR	----------
Ivory	1-1/4" to 2"	1086005IVR	----------
Ivory	1-1/8" to 2"	1086006IVR	----------
Ivory	See Page R•153	1086007IVR	----------

Spare Parts Ordering Information

Threaded Shaft Cam Bars
Offset: 109100188A
Straight: 109100388A
Extra Long Offset: 109100488A
Extra Long Straight: 109100588A
Extra Long Offset: 109100688A
Slam Cam: 1075007CHR or 1075DP7CHR

PROP 65 WARNING
(Contains DINP)

Black	White	Ivory

Consult factory for custom colors matches

Draw-Down Feature

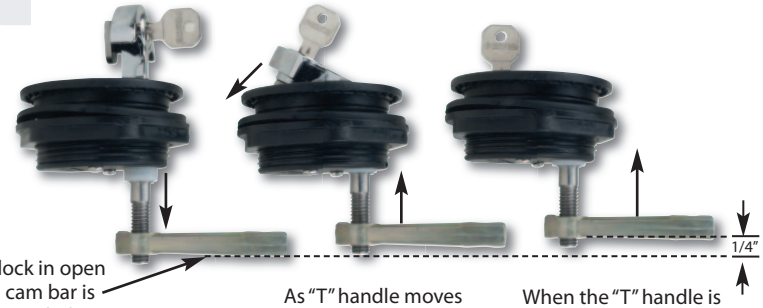

With the lock in open position cam bar is fully extended.

As "T" handle moves to the closed position, the cam bar begins to retract.

When the "T" handle is fully closed, the cam bar pulls up on mounting surface creating a snug fit.

Cam Bar Options

No. 1
Offset Cam Bar

No. 3
Straight Cam Bar

No. 4
Extra Long
Offset Cam Bar

No. 5
Extra Long
Straight Cam Bar

No. 6
Extra Long
Offset Cam Bar

No. 7
Slam Cam Bar
with Emergency Hatch Release

"T" Handle Surface Mount Lock

Surface Mount "T" Handle Locks

Gasket Included for Smooth Surface Applications

Material:	Polymer Body with either Zinc Alloy or Polymer "T" Handle and Stainless Steel Stem
Finish:	Black, White or Ivory Body with either Chrome Plated, Black or White "T" Handle
Installation:	Mounting Hole Diameter: 2-1/2" Face Plate Diameter: 3" For Mounting Surfaces: 1/8" to 3/4"
Features:	• Gasket Included for Smooth Surface Applications • Handle will lay flat in open, unlocked position.

Fig. 1085
shown with No. 1
Offset Cam Bar

Body Color	Adjustment Cam Bar	OEM Bulk Pkg.	Retail Pkg.
Black	3/4" to 2-3/8"	1085001BLK	1085DP1BLK
Black	1-1/4" to 1-7/8"	1085003BLK	1085DP3BLK
Black	1/2" to 3"	1085004BLK	1085DP4BLK
Black	1-1/4" to 2"	1085005BLK	1085DP5BLK
Black	1-1/8" to 2"	1085006BLK	1085DP6BLK
Black	See Page R•153	1085007BLK	1085DP7BLK
White	3/4" to 2-3/8"	1085001WHT	1085DP1WHT
White	1-1/4 to 1-7/8	1085003WHT	1085DP3WHT
White	1/2" to 3"	1085004WHT	1085DP4WHT
White	1-1/4" to 2"	1085005WHT	1085DP5WHT
White	1-1/8" to 2"	1085006WHT	1085DP6WHT
White	See Page R•153	1085007WHT	1085DP7WHT
Ivory	3/4" to 2-3/8"	1085001IVR	
Ivory	1-1/4" to 1-7/8"	1085003IVR	
Ivory	1/2" to 3"	1085004IVR	
Ivory	1-1/4" to 2"	1085005IVR	
Ivory	1-1/8" to 2"	1085006IVR	
Ivory	See Page R•153	1085007IVR	

NEW COLOR
Ivory

Consult factory for custom colors matches

Fig. 1085 Lock
shown with No. 7
Slam Cam Bar

Emergency Hatch
Release from inside

PROP 65 WARNING
(Contains DINP)

Spare Parts Ordering Information

Threaded Shaft Cam Bars
Offset: 109100188A
Straight: 109100388A
Extra Long Offset: 109100488A
Extra Long Straight: 109100588A
Extra Long Offset: 109100688A
Slam Cam: 1075007CHR or 1075DP7CHR

Black	White	Ivory

Consult factory for custom colors matches

Cam Bar Options

No. 1
Offset Cam Bar

No. 3
Straight Cam Bar

No. 4
Extra Long
Offset Cam Bar

No. 5
Extra Long
Straight Cam Bar

No. 6
Extra Long
Offset Cam Bar

No. 7
Slam Cam Bar
with Emergency Hatch Release

"T" Handle Surface Mount Locks, Latches, and Pull

Surface Mount "T" Handle Locks, Latches and Pull

Gasket Included for Smooth Surface Applications, Toothed Back for Carpet Surface Applications

Material:		Polymer Body with either Zinc Alloy or Polymer "T" Handle and Stainless Steel Stem
Finish:		Black, White or Ivory Body with either Chrome Plated, Black or White "T" Handle
Installation:		Mounting Hole Diameter: 2-1/2" Face Plate Diameter: 3" For Mounting Surfaces: 1/8" to 3/4"
Features:	Fig. 1091:	Lock with 2 keys
	Fig. 1092:	Latch, non-locking
	Fig. 1093:	Pull

Fig. 1091 #1 White/Chrome Shown

The T - Handle Drops Down Flush in Either the Open or Closed (180° Rotation) Position (Except with the Offset Cam Bar Positioned Upward)

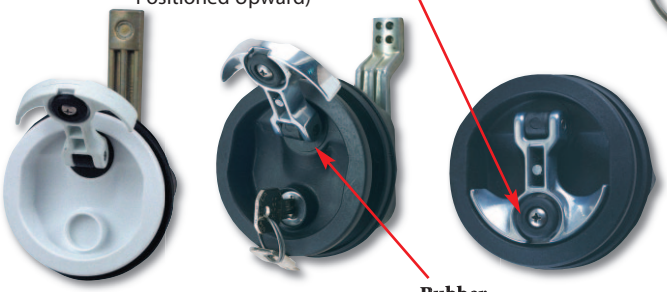

Latch Version **Lock Version** **Rubber Seal**

The Rubber Seal & Boot Under the T - Handle Seals the Lock Cylinder Preventing Water Intrusion

Mounting Options:

Surface Mount

Upholstery Mount

Carpet Mount

PROP 65 WARNING
(Contains Lead & DINP)

Black	White	Ivory

Consult factory for custom colors matches

Fig. 1093 Pull

Cam Bar Options

No. 1 Offset Cam Bar

No. 3 Straight Cam Bar

No. 4 Extra Long Offset Cam Bar

No. 5 Extra Long Straight Cam Bar

No. 6 Extra Long Offset Cam Bar

No. 7 Slam Cam Bar with Emergency Hatch Release

"T" Handle Surface Mount Locks, Latches, and Pull

Type	Body Color	Handle Color	Adjustment Cam Bar Inches	OEM Bulk Pkg.	Retail Pkg.
Lock	Black	Chrome	No Cam Bar	----------	1091DP0BLK*
			3/4" to 2-3/8"	1091001BLK	1091DP1BLK
			1-1/4" to 1-7/8"	1091003BLK	1091DP3BLK
			1/2" to 3"	1091004BLK	1091DP4BLK
			1-1/4" to 2"	1091005BLK	1091DP5BLK
			1-1/8" to 2"	1091006BLK	1091DP6BLK
			See Page 153	1091007BLK	1091DP7BLK
Lock	Black	Black	3/4" to 2-3/8"	1091B01BLK	----------
			1-1/4" to 1-7/8"	1091B03BLK	----------
			1/2" to 3"	1091B04BLK	----------
			1-1/4" to 2"	1091B05BLK	----------
			1-1/8" to 2"	1091B06BLK	----------
			See Page 153	1091B07BLK	----------
Lock	White	Chrome	No Cam Bar	----------	1091DP0WHT*
			3/4" to 2-3/8"	1091001WHT	1091DP1WHT
			1-1/4" to 1-7/8"	1091003WHT	1091DP3WHT
			1/2" to 3"	1091004WHT	1091DP4WHT
			1-1/4" to 2"	1091005WHT	1091DP5WHT
			1-1/8" to 2"	1091006WHT	1091DP6WHT
			See Page 153	1091007WHT	1091DP7WHT
Lock	White	White	3/4" to 2-3/8"	1091W01WHT	----------
			1-1/4" to 1-7/8"	1091W03WHT	----------
			1/2" to 3"	1091W04WHT	----------
			1-1/4" to 2"	1091W05WHT	----------
			1-1/8" to 2"	1091W06WHT	----------
			See Page 153	1091W07WHT	----------
Lock	Ivory	Chrome	3/4" to 2-3/8"	1091001IVR	NEW COLOR
			1-1/4" to 1-7/8"	1091003IVR	
			1/2" to 3"	1091004IVR	
			1-1/4" to 2"	1091005IVR	
			1-1/8" to 2"	1091006IVR	
			See Page 153	1091007IVR	Ivory

Type	Body Color	Handle Color	Adjustment Cam Bar Inches	OEM Bulk Pkg.	Retail Pkg.
Latch	Black	Chrome	No Cam Bar	----------	1092DP0BLK*
			3/4" to 2-3/8"	1092001BLK	1092DP1BLK
			1-1/4" to 1-7/8"	1092003BLK	1092DP3BLK
			1/2" to 3"	1092004BLK	1092DP4BLK
			1-1/4" to 2"	1092005BLK	1092DP5BLK
			1-1/8" to 2"	1092006BLK	1092DP6BLK
			See Page 153	1092007BLK	1092DP7BLK
Latch	Black	Black	3/4" to 2-3/8"	1092B01BLK	----------
			1-1/4" to 1-7/8"	1092B03BLK	----------
			1/2" to 3"	1092B04BLK	----------
			1-1/4" to 2"	1092B05BLK	----------
			1-1/8" to 2"	1092B06BLK	----------
			See Page 153	1092B07BLK	----------
Latch	White	Chrome	No Cam Bar	----------	1092DP0WHT*
			3/4" to 2-3/8"	1092001WHT	1092DP1WHT
			1-1/4" to 1-7/8"	1092003WHT	1092DP3WHT
			1/2" to 3"	1092004WHT	1092DP4WHT
			1-1/4" to 2"	1092005WHT	1092DP5WHT
			1-1/8" to 2"	1092006WHT	1092DP6WHT
			See Page 153	1092007WHT	1092DP7WHT
Latch	White	White	3/4" to 2-3/8"	1092W01WHT	----------
			1-1/4" to 1-7/8"	1092W03WHT	----------
			1/2" to 3"	1092W04WHT	----------
			1-1/4" to 2"	1092W05WHT	----------
			1-1/8" to 2"	1092W06WHT	----------
			See Page 153	1092W07WHT	----------
Latch	Ivory	Chrome	3/4" to 2-3/8"	1092001IVR	NEW COLOR
			1-1/4" to 1-7/8"	1092003IVR	
			1/2" to 3"	1092004IVR	
			1-1/4" to 2"	1092005IVR	
			1-1/8" to 2"	1092006IVR	
			See Page 153	1092007IVR	Ivory

Type	Color Body	Color Handle	Diameter	OEM Bulk Pkg.
Pull	Black	Black	3"	1093000BLK
Pull	Black	Chrome	3"	1093000CHR
Pull	White	White	3"	1093000WHT

* Dealers Order with Cam Bar Assortment: 1091DP099A

Consult factory for custom colors

Spare Parts Ordering Information

Threaded Shaft Cam Bars
Offset: 109100188A
Straight: 109100388A
Extra Long Offset: 109100488A
Extra Long Straight: 109100588A
Extra Long Offset: 109100688A
Slam Cam: 1075007CHR or 1075DP7CHR

Old Style Square Shaft Cam Bars
Offset: 109100199A
Straight: 109100399A
Extra Long Offset: 109100499A
Extra Long Straight: 109100599A

PROP 65 WARNING
(Contains Lead & DINP)

Flush Locks & Latches

Surface Mount Flush Locks and Latches

Material: Polymer Body with Zinc Alloy Handle and Stainless Steel Stem and Lock Nut
Finish: Black or White Body with Chrome Plated Handle
Dimensions Face Plate: 2-1/2" x 2-1/2"
For Door Thickness: 1/4" to 1-1/8"
Installation: Mounting Hole Diameter: 2"
Features:
- Detents indicate open or closed position.
- Size No. 1: Offset cam bar and flexible polymer strike
- Size No. 2: Offset adjustable cam bar
- Size No. 3: Straight cam bar and flexible polymer strike

Fig. 0931: Lock with 2 keys
Fig. 0932: Latch, non-locking

Fig. 0931 #1

Fig. 0932 #2 Fig. 0931 #3

Type	Adjustment Cam Bar	Black Retail Pkg.	White Retail Pkg.	Black OEM Bulk Pkg.	White OEM Bulk Pkg.
Lock	3/8" to 3"	0931DP1BLK	0931DP1WHT	0931001BLK	0931001WHT
Lock	3/8" to 3"	0931DP2BLK	0931DP2WHT	0931002BLK	0931002WHT
Lock	1-1/16" to 2-9/16"	0931DP3BLK	0931DP3WHT	0931003BLK	0931003WHT
Latch	3/8" to 3"	0932DP1BLK	0932DP1WHT	0932001BLK	0932001WHT
Latch	3/8" to 3"	0932DP2BLK	0932DP2WHT	0932002BLK	0932002WHT
Latch	1-1/16" to 2-9/16"	0932DP3BLK	0932DP3WHT	0932003BLK	0932003WHT

Spare Parts Ordering Information
Offset Cam Bar: 093100199A
Offset Adjustable Cam Bar: 093100299A
Straight Cam Bar: 093100399A
Flexible Polymer Strike: 093100099B

PROP 65 WARNING (Contains Lead)

Surface Mount Flush Locks and Latches

Material: Polymer Body with Zinc Alloy Handle and Stainless Steel Stem and Lock Nut
Finish: Black or White Body with Chrome Plated Handle
Dimensions Face Plate: 3-1/8" x 3-1/8"
For Door Thickness: 1/8" to 3/4"
Installation:
- Flush mounts in a 2-3/8" x 2-3/8" hole
- Surface mounts in a 1-5/8" diameter hole with polymer spacer (included)

Features:
- Large handle allows two finger grip

Fig. 1031: Lock with 2 keys
Fig. 1032: Latch, non-locking

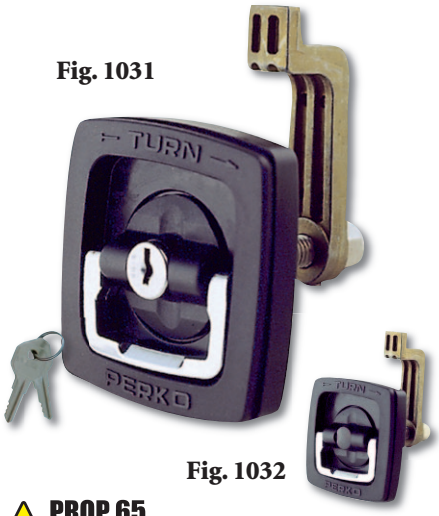

Fig. 1031

Fig. 1032

Type	Adjustment Cam Bar	Black Retail Pkg.	White Retail Pkg.	Black OEM Bulk Pkg.	White OEM Bulk Pkg.
Lock	1/2" to 3"	1031DP1BLK	1031DP1WHT	1031001BLK	1031001WHT
Latch	1/2" to 3"	1032DP1BLK	1032DP1WHT	1032001BLK	1032001WHT

Spare Parts Ordering Information
Offset Cam Bar For 1031/1032: 103100499A

PROP 65 WARNING (Contains Lead)

Lock and Latch Cover

Material: Fiber Reinforced Polymer
Finish: Black or White
Features: Hinged, water resistant

Fig. 1089

Color	Fits Fig. No.	Overall Dimensions	Retail Pkg.	OEM Bulk Pkg.
Black	0931/0932	2-3/4" x 3-1/4"	1089DP1BLK	1089001BLK
White	0931/0932	2-3/4" x 3-1/4"	1089DP1WHT	1089001WHT
Black	1031/1032	3-1/4" x 3-3/4"	1089DP3BLK	1089003BLK
White	1031/1032	3-1/4" x 3-3/4"	1089DP3WHT	1089003WHT

Flush Locks & Latches

Surface Mount Flush Locks and Latches

For Carpet or Smooth Surface Applications

Material:	Polymer Body with Stainless Steel "D" Ring Handle, Stem and Lock Nut
Finish:	Black or White Body
Dimensions	Face Plate: 2-7/8" x 2-7/8"
Mounting Surface:	3/8" to 7/8"
Installation:	Mounting Hole: 2-3/8" Diameter
Features:	• Position indicator shows open or closed position • Two o-rings for increased water resistance • Size No. 1: Offset cam bar and flexible polymer strike • Size No. 2: Offset adjustable cam bar • Size No. 3: Straight cam bar and flexible polymer strike

Fig. 1071: Lock with 2 keys (For carpet surface applications only)
Fig. 1072: Latch, non-locking (For carpet surface applications only)
Fig. 1081: Lock with 2 keys (includes gasket for smooth surface applications)
Fig. 1082: Latch-non-locking (includes gasket for smooth surface applications)

Fig. 1071 #1 Shown

Fig. 1072 #2 Shown

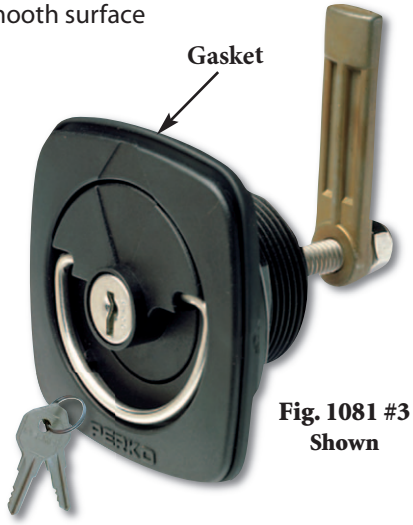

Fig. 1081 #3 Shown

Color	Type	Adjustment Cam Bar	Carpet Only Figs. 1071/1072 OEM Bulk Pkg.	Carpet or Smooth Surface Figs. 1081/1082 Retail Pkg.	Carpet or Smooth Surface Figs. 1081/1082 OEM Bulk Pkg.
Black	Lock	3/8" to 3"	1071001BLK	1081DP1BLK	1081001BLK
Black	Lock	3/8" to 3"	1071002BLK	1081DP2BLK	1081002BLK
Black	Lock	1-1/16" to 2-9/16"	1071003BLK	1081DP3BLK	1081003BLK
Black	Latch	3/8" to 3"	1072001BLK	1082DP1BLK	1082001BLK
Black	Latch	3/8" to 3"	1072002BLK	1082DP2BLK	1082002BLK
Black	Latch	1-1/16" to 2-9/16"	1072003BLK	1082DP3BLK	1082003BLK
White	Lock	3/8" to 3"	1071001WHT	1081DP1WHT	1081001WHT
White	Lock	3/8" to 3"	1071002WHT	1081DP2WHT	1081002WHT
White	Lock	1-1/16" to 2-9/16"	1071003WHT	1081DP3WHT	1081003WHT
White	Latch	3/8" to 3"	1072001WHT	1082DP1WHT	1082001WHT
White	Latch	3/8" to 3"	1072002WHT	1082DP2WHT	1082002WHT
White	Latch	1-1/16" to 2-9/16"	1072003WHT	1082DP3WHT	1082003WHT

Flexible Polymer Strike

Spare Parts Ordering Information

Offset Cam Bar: 093100199A
Offset Adjustable Cam Bar: 093100299A
Straight Cam Bar: 093100399A
Flexible Polymer Strike: 093100099B

PROP 65 WARNING (Contains Lead)

Self Adjusting Slam Latch and Cam Bar Selection Guide

Self Adjusting Slam Latch - Patent No. 7,066,504

Material:	Polymer Body and Strike
Finish:	Black or White
Dimensions	Face Plate: 2-3/8" O.D.
Mounting Surface:	1/8" to 3/4"
Installation:	2" Diameter Hole
Features:	**Unique to PERKO**

- "PERKO leak proof" slide action design keeps inside of hatches dry
- Self-adjusting, ratcheting cam bar/strike permits installations with slight misalignment of components
- Includes an emergency hatch release from inside the compartment
- Similar in look to popular PERKO Fig. 1091 series
- Simple one nut installation
- Retail package includes 2 strikes to accommodate a variety of mounting configurations

Fig. 0675

Black

Self-Adjusting, Ratcheting Slide Action Design

PROP 65 WARNING
(Contains DINP)

Adjustment Cam Bar	Retail Pkg.	OEM Bulk Pkg.
1/8 to 3/4	0675DPBBLK	0675B00BLK
1/8 to 3/4	0675DPWWHT	0675W00WHT

Mounting Illustration

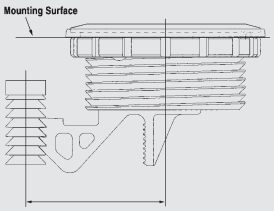

UPHOLSTERY TRIM RING
BLACK OR WHITE POLYMER

Fig. 1097 Upholstery Trim Ring

Detail Showing Available Upholstery Mounting Ring
Contact Factory for details

CAM BAR SELECTION GUIDE

Cam Bars for 0931/0932, 1071/1072 and 1081/1082 Series Lock & Latch Sets with 5/16" Shafts

Cam Bars for 1085, 1091/92, 1094/95 and 1031/1032 Series Lock & Latch Sets with 3/8" Shafts

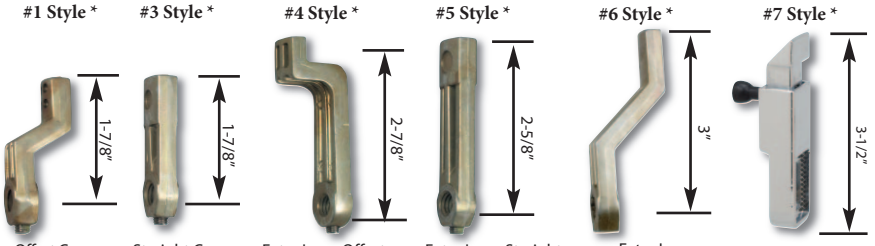

Measurements are from the center of the lock set to the top of the cam bar shaft end.
*Note: 1091/1092 series have offset center shafts, add 5/8" for Dimension from center.

Shower Door Latches

Shower Door Latch Sets

Material: Brass and Zinc Alloy Components
Finish: Chrome Plated
For Glass Thickness: : 5/16" to 1/2"
Installation: Mounting Hole Diameter: 7/8"
Features:
- 180° and 135° cam bar options
- Slotted strike or "J" hook installation options
- Provides closure by latching door in glass-to-wall or glass-to-glass installations
- Centers the door in out-of-alignment situations
- Positive zero degree closure
- Operational from both sides of the door
- Internal ball point indexing mechanism keeps the knob from "free-spinning"

Fig. 0740: Round knobs with grip detents
Fig. 0743: Tapered body cylinder with "L" shaped horizontal handles
Fig. 0744: Round body cylinder with "L" shaped vertical handles

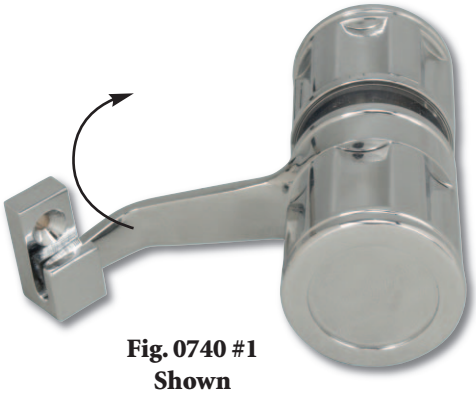

Fig. 0740 #1 Shown

Fig. 0743 #1 Shown

Fig. 0744 #3 Shown Mounted

Fig. 0744 #3 Shown

Handle Type	Cam Bar Angle	Strike Type	Dimensions Overall	Standard Pkg.
Knob	135°	Hook		0740001CHR
Knob	180°	Slotted	1-1/2" x 3-1/2"	0740002CHR
Knob	180°	Hook		0740003CHR
Lever	135°	Hook		0743001CHR
Lever	180°	Slotted	3-1/2" x 3-1/2"	0743002CHR
Lever	180°	Hook		0743003CHR
Lever	135°	Hook		0744001CHR
Lever	180°	Slotted	1-1/2" x 3-1/2"	0744002CHR
Lever	180°	Hook		0744003CHR

Slotted Strike

"J" Hook Strike

Spare Parts Ordering Information
Slotted Strike: 074000299A Hook Strike: 074000199A

PROP 65 WARNING (Contains Lead)

Determining the Hand of a Lock or Latch Set

When Standing Outside: If the Door Opens Away From You,
You Need a Lock or Latch with a Regular Bevel.
If the Door Opens Toward You, You Need a Lock or Latch with a Reverse Bevel.

Refer to the illustrations below when selecting the proper hand configuration of the lock and latch sets on the following pages.

When Standing Outside

A

Lock/Latch Type:
LEFT INWARD
Regular Bevel

B

Lock/Latch Type:
LEFT OUTWARD
Reverse Bevel

C

Lock/Latch Type:
RIGHT INWARD
Regular Bevel

D

Lock/Latch Type:
RIGHT OUTWARD
Reverse Bevel

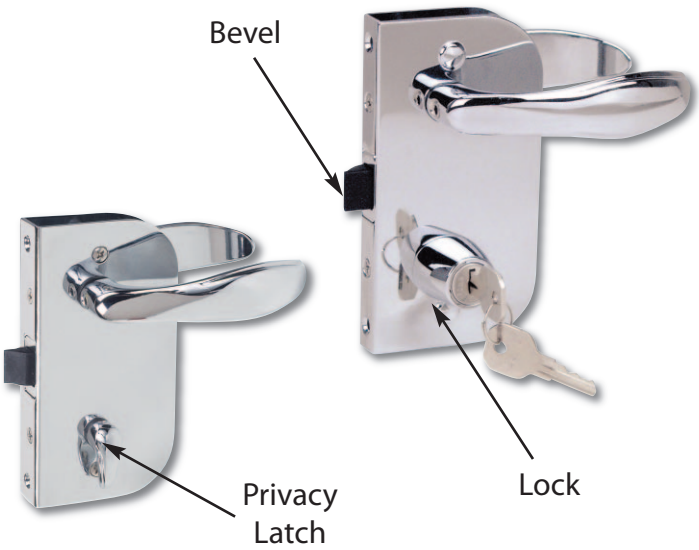

NOTE: The privacy latch handle should always be mounted on the door's interior side

Flush Mount Lock and Latch Sets

Flush Mount Door Lock and Latch Sets

with privacy latch for interior cabins and head enclosures

Material: Brass and Zinc Alloy Components
Finish: Chrome Plated
Dimensions: Overall Height: 5-1/4"
For Door Thickness: 1/2", 5/8", or 3/4"
Features:
Fig. 0711: Latch set with safety unlock from outside
Fig. 0731: Lock set with keyed lock from outside and interior turn button lock mechanism from inside

Fig. 0711 Flush Latch Shown

Fig. 0731 Flush Lock

Type	Hand of Lock/Latch*	For Door Thickness	Standard Pkg.
Latch	A	1/2"	0711001LIC
Latch	A	5/8"	0711002LIC
Latch	A	3/4"	0711003LIC
Latch	B	1/2"	0711001LOC
Latch	B	5/8"	0711002LOC
Latch	B	3/4"	0711003LOC
Latch	C	1/2"	0711001RIC
Latch	C	5/8"	0711002RIC
Latch	C	3/4"	0711003RIC
Latch	D	1/2"	0711001ROC
Latch	D	5/8"	0711002ROC
Latch	D	3/4"	0711003ROC
Lock	A	1/2"	0731001LIC
Lock	A	5/8"	0731002LIC
Lock	A	3/4"	0731003LIC
Lock	B	1/2"	0731001LOC
Lock	B	5/8"	0731002LOC
Lock	B	3/4"	0731003LOC
Lock	C	1/2"	0731001RIC
Lock	C	5/8"	0731002RIC
Lock	C	3/4"	0731003RIC
Lock	D	1/2"	0731001ROC
Lock	D	5/8"	0731002ROC
Lock	D	3/4"	0731003ROC

PROP 65 WARNING *(Contains Lead)*

Flush Mount Door Latch Set

without privacy latch

Material: Brass and Zinc Alloy Components
Finish: Chrome Plated
Dimensions: Overall Height: 5-1/4"
For Door Thickness: 1/2", 5/8", or 3/4"

Type	Hand of Lock/Latch*	For Door Thickness	Standard Pkg.
Latch	A	1/2"	0715001LIC
Latch	A	5/8"	0715002LIC
Latch	A	3/4"	0715003LIC
Latch	B	1/2"	0715001LOC
Latch	B	5/8"	0715002LOC
Latch	B	3/4"	0715003LOC
Latch	C	1/2"	0715001RIC
Latch	C	5/8"	0715002RIC
Latch	C	3/4"	0715003RIC
Latch	D	1/2"	0715001ROC
Latch	D	5/8"	0715002ROC
Latch	D	3/4"	0715003ROC

Fig. 0715 Flush Latch w/o Privacy Latch

PROP 65 WARNING *(Contains Lead)*

* Note: Refer to Page R•162 to determine the proper hand of a lock or latch set.

Mortise Lock and Latch Sets

Full Size Mortise Lock and Latch Sets

with privacy lock for interior cabins and head enclosures

Material: Brass and Zinc Alloy Components
Finish: Chrome Plated
Dimensions: Overall Height: 5-1/4"
For Door Thickness: 1/2" to 3/4"
Features:
- Two escutcheon plates
- Interchangeable bevels

Fig. 0710: Latch set with safety unlock from outside
Fig. 0730: Lock set with keyed lock from outside and interior turn button lock mechanism from inside

Fig. 0710
Mortise Latch

Fig. 0730
Mortise Lock

Type	Hand of Lock/Latch*	For Door Thickness	Standard Pkg.
Latch	A or D	3/4" to 1"	0710001LIC
Latch	A or D	1" to 1-1/4"	0710002LIC
Latch	A or D	1-1/4" to 1-1/2"	0710003LIC
Latch	B or C	3/4" to 1"	0710001RIC
Latch	B or C	1" to 1-1/4"	0710002RIC
Latch	B or C	1-1/4" to 1-1/2"	0710003RIC
Lock	A or D	3/4"	0730001LIC
Lock	A or D	7/8"	0730002LIC
Lock	A or D	1"	0730003LIC
Lock	A or D	1-1/8"	0730004LIC
Lock	A or D	1-1/4"	0730005LIC
Lock	A or D	1-3/8"	0730006LIC
Lock	A or D	1-1/2"	0730007LIC
Lock	B or C	3/4"	0730001RIC
Lock	B or C	7/8"	0730002RIC
Lock	B or C	1"	0730003RIC
Lock	B or C	1-1/8"	0730004RIC
Lock	B or C	1-1/4"	0730005RIC
Lock	B or C	1-3/8"	0730006RIC
Lock	B or C	1-1/2"	0730007RIC

PROP 65 WARNING
(Contains Lead)

Full Size Mortise Latch Set

without privacy lock

Material: Brass and Zinc Alloy Components
Finish: Chrome Plated
Dimensions: Overall Height: 5-1/4"
For Door Thickness: 3/4" to 1-1/2"
Features:
- Two escutcheon plates
- Interchangeable bevels

Fig. 0706
Mortise Latch
w/o Privacy Latch

Type	Hand of Latch*	For Door Thickness	Standard Pkg.
Latch	A or D	3/4" to 1"	0706001LIC
Latch	A or D	1" to 1-1/4"	0706002LIC
Latch	A or D	1-1/4" to 1-1/2"	0706003LIC
Latch	B or C	3/4" to 1"	0706001RIC
Latch	B or C	1" to 1-1/4"	0706002RIC
Latch	B or C	1-1/4" to 1-1/2"	0706003RIC

PROP 65 WARNING
(Contains Lead)

*** Note: Refer to Page R•162 to determine the proper hand of a lock or latch set.**

Mortise Lock and Latch Sets

Compact Mortise Latch Set

with privacy lock for interior cabins and head enclosures

Material: Brass and Zinc Alloy Components
Finish: Chrome Plated
Dimensions: Overall Height: 5-1/4"
For Door Thickness: 3/4" to 1-1/2"
Features:
- Two escutcheon plates
- Interchangeable bevels
- Latch set with safety unlock from outside
- Interior turn button lock mechanism from inside

Fig. 0712 Compact Mortise Latch

Type	Hand of Lock/Latch*	For Door Thickness	Standard Pkg.
Latch	A or D	3/4" to 1"	0712001LIC
Latch	A or D	1" to 1-1/4"	0712002LIC
Latch	A or D	1-1/4" to 1-1/2"	0712003LIC
Latch	B or C	3/4" to 1"	0712001RIC
Latch	B or C	1" to 1-1/4"	0712002RIC
Latch	B or C	1-1/4" to 1-1/2"	0712003RIC

PROP 65 WARNING (Contains Lead)

Full Size Surface Mount Lock Set

Material: Brass and Zinc Alloy Components
Finish: Chrome Plated
Dimensions: Overall Height: 5-1/4"
For Door Thickness : 1-1/16" to 1-3/8"
Features:
- Keyed lock from outside
- Interior turn button lock mechanism from inside

Fig. 0716 Surface Mount Lock

Type	Hand of Lock/Latch*	For Door Thickness	Standard Pkg.
Lock	D	1-1/16"	0716001ROC
Lock	D	1-1/8"	0716002ROC
Lock	D	1-3/8"	0716003ROC

PROP 65 WARNING (Contains Lead)

For any other door thickness or other "hands", consult factory for availability.

* Note: Refer to Page R•162 to determine the proper hand of a lock or latch set.

Lock & Latch Sets

Rim Latch Sets

Material:	Zinc Alloy
Finish:	Chrome Plated
Dimensions:	Case: 2-1/8" x 1-3/4"
	Escutcheon: 4-3/8" x 1-1/4"
For Door Thickness:	5/8" to 1-3/8"
Screw Size:	#6
Features:	Sliding lock button
Fig. 0928:	Regular bevel with box strike
Fig. 1028:	Reverse bevel with box strike

Fig. 0928 Shown Assembled

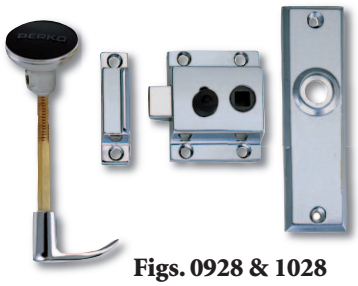

Figs. 0928 & 1028

Bevel Type*	Retail Pkg.	OEM Bulk Pkg.
Regular	0928DP0CHR	0928000CHR
Reverse	1028DP0CHR	1028000CHR

PROP 65 WARNING (Contains Lead)

Rim Latch Sets

Material:	Zinc Alloy
Finish:	Chrome Plated
Dimensions:	Case: 2-1/8" x 1-3/4"
	Escutcheon: 4-3/8" x 1-1/4"
For Door Thickness:	5/8" to 1-3/8"
Screw Size:	#6
Features:	Sliding lock button
Fig. 0930:	Regular bevel with flush strike
Fig. 1030:	Reverse bevel with flush strike

Fig. 0930 Shown Assembled

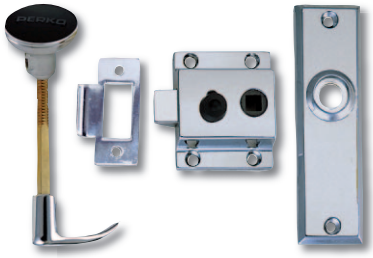

Figs. 0930 & 1030

Bevel Type*	Retail Pkg.	OEM Bulk Pkg.
Reverse	0930DP0CHR	0930000CHR
Regular	1030DP0CHR	1030000CHR

PROP 65 WARNING (Contains Lead)

* Note: Refer to Page R•162 to determine the proper bevel of a lock or latch set.

Spare Parts Ordering Information

For Figs. 0928 & 1028
Box Strike: 0976000CHR
Regular Bevel with Cam: 0984000CHR
Knob and Handle Assembly: 0962000CHR
Reverse Bevel with Cam: 0920DP0CHR

For Figs. 0930 & 1030
Flush Strike: 0912DP0CHR
Regular Bevel with Cam: 0984000CHR
Knob and Handle Assembly: 0962000CHR
Reverse Bevel with Cam: 0920DP0CHR

Lock & Latch Sets

Rim Lock Sets

Material:	Zinc Alloy
Finish:	Chrome Plated
Dimensions:	Case: 3-7/8" x 2"
	Escutcheon: 4-3/8" x 1-1/4"
For Door Thickness:	5/8" to 1-3/8"
Screw Size:	#6
Features:	Locks by turn button from inside or key from outside
Fig. 0918:	Regular bevel with box strike
Fig. 0919:	Reverse bevel with flush strike

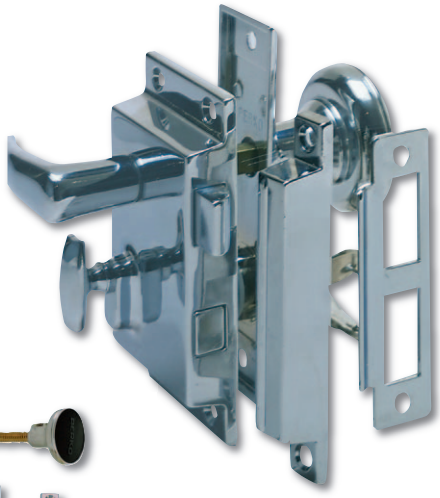

Fig. 0918/0919 Shown Assembled

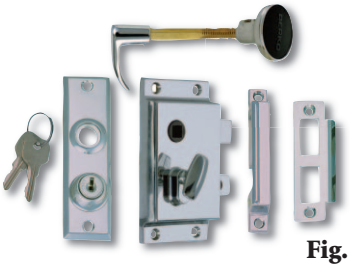

Fig. 0919

Fig. 0918

Bevel/Strike* Type	Retail Pkg.	OEM Bulk Pkg.
Regular w/Box	0918DP0CHR	0918000CHR
Reverse w/Flush	0919DP0CHR	0919000CHR

PROP 65 WARNING (Contains Lead)

Flush Cup Rim Latch Sets

Material:	Zinc Alloy with Polymer Spacer for Surface Mounting
Finish:	Chrome Plated with Black Spacer
Dimensions:	Case: 2-1/8" x 1-3/4"
	Escutcheon: 2" x 2-1/4"
For Door Thickness:	3/4" to 1-1/8"
Screw Size:	Cup: #8
	Case: #6
Features:	Sliding lock button
Fig. 1279:	Regular bevel with box strike
Fig. 1280:	Reverse bevel with flush strike

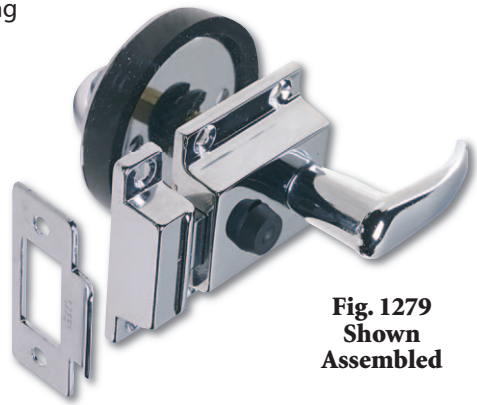

Fig. 1279 Shown Assembled

Fig. 1279

Fig. 1280

Bevel/Strike* Type	Retail Pkg.	OEM Bulk Pkg.
Regular w/Box	1279DP0CHR	1279000CHR
Reverse w/Flush	1280DP0CHR	1280000CHR

PROP 65 WARNING (Contains Lead)

* Note: Refer to Page R•162 to determine the proper bevel of a lock or latch set.

Spare Parts Ordering Information

For Figs. 0918 & 0919
Regular Bevel with Cam: 0984000CHR
Reverse Bevel with Cam: 0920DP0CHR
Knob and Handle Assembly: 0962000CHR
Escutcheon Plate with Keys: 0953000CHR
Box Strike: 091800099A
Flush Strike: 0913DP0CHR

For Figs. 1279 & 1280
Regular Bevel with Cam: 0984000CHR
Reverse Bevel with Cam: 0920DP0CHR
Box Strike: 0976000CHR
Flush Strike: 0912DP0CHR

Lock & Latch Sets

Mortise Lock Set

Material:	Zinc Alloy
Finish:	Chrome Plated
Dimensions:	Case: 2-3/4" x 2"
	Escutcheon: 4-3/8" x 1-1/4"
For Door Thickness:	1" to 1-3/8"
Screw Size:	#6
Features:	• Locks by turn button from inside or key from outside.
	• Bevel can be reversed during installation.

Fig. 0927 Shown Assembled

PROP 65 WARNING (Contains Lead)

Retail Pkg.	OEM Bulk Pkg.
0927DP0CHR	0927000CHR

Mortise Latch Set

Material:	Zinc Alloy
Finish:	Chrome Plated
Dimensions:	Case: 2-1/4" x 1-13/16"
	Escutcheon: 4-3/8" x 1-1/4"
For Door Thickness:	1" to 1-3/8"
Screw Size:	#6
Features:	• Turn button lock
	• Bevel can be reversed during installation.

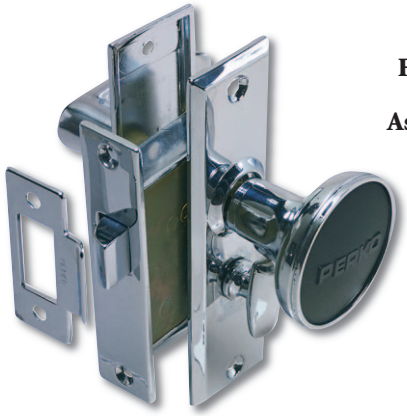

Fig. 0960 Shown Assembled

PROP 65 WARNING (Contains Lead)

Retail Pkg.	OEM Bulk Pkg.
0960DP0CHR	0960000CHR

Tubular Latch Set

Material:	Zinc Alloy
Finish:	Chrome Plated
Dimensions:	O.D. Tube: 3/4"
	Escutcheon: 4-3/8" x 1-1/4"
For Door Thickness:	1" to 1-3/8"
Screw Size:	#6
Features:	Sliding lock button

Fig. 0567 Shown Assembled

PROP 65 WARNING (Contains Lead)

Retail Pkg.	OEM Bulk Pkg.
0567DP0CHR	0567000CHR

Spare Parts Ordering Information

For Fig. 0927
Flush Strike: 0913DP0CHR
Bevel with Cam: 0920DP0CHR
Knob and Handle Assy: 0962000CHR
Escutcheon Plate with Keys: 092700099B

For Fig. 0960
Flush Strike: 0912DP0CHR
Bevel with Cam: 096000099A
Knob and Handle Assy: 0962000CHR

For Fig. 0567
Flush Strike: 0912DP0CHR
Knob and Handle Assy: 0962000CHR

Hatch Dogs

Flush Hatch Dog with Rectangular Flange

For Securely "Dogging" (Fastening) Deck Hatches

Material:	Bronze with Stainless Steel Lock Nuts
Finish:	Chrome Plated
Dimensions:	Face Plate: 3-13/16" x 3"
Max Hatch Thickness:	Range: 2"
Cam Bar Adjustment:	1-1/4" to 2"
Screw Size:	#8

Features:
- Latch or Locking Versions
- Flange with visible mounting holes or smooth flange with concealed fasteners
- Flush strike
- O-Ring seals for water resistance
- Does not rattle when "dogged" down

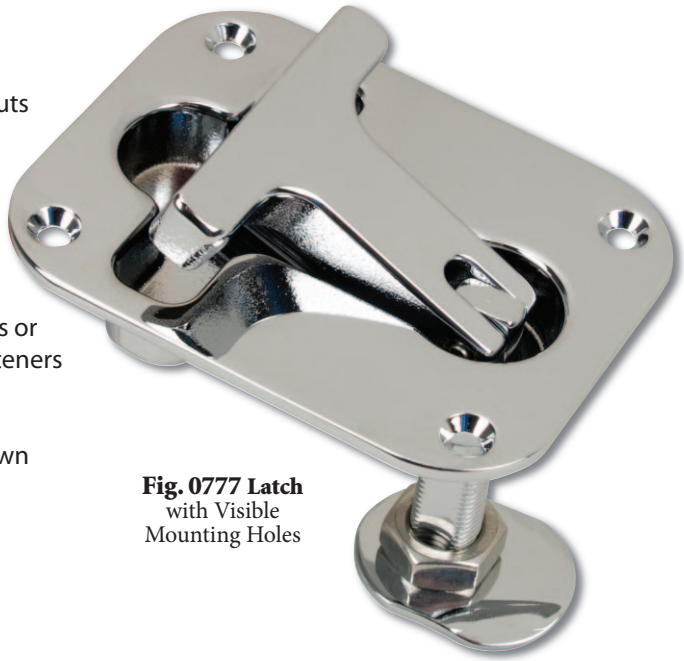

Fig. 0777 Latch with Visible Mounting Holes

Detail of Concealed Fasteners Bottom Plate

Fig. 0777FL Lock with Concealed Fasteners

Fig. 0777F Latch with Concealed Fasteners

Fig. 0777L Lock with Visible Mounting Holes

Type	Cam Bar Length	Standard. Pkg.* OEM Bulk Pkg. Visible Mount Holes	Standard. Pkg.* OEM Bulk Pkg. Concealed Fasteners
Latch	15/16"	0777000CHR	0777F00CHR
Latch	1-1/2"	0777001CHR	0777F01CHR
Latch	3"	0777002CHR	0777F02CHR
Lock	15/16"	0777L00CHR	0777FL0CHR
Lock	1-1/2"	0777L01CHR	0777FL1CHR
Lock	3"	0777L02CHR	0777FL2CHR

* Std. Pkg. 1 Pc.

PROP 65 WARNING *(Contains Lead)*

Spare Parts Ordering Information

Cam Bar for Size #0: 077700099A
Cam Bar for Size #1: 077700199A
Cam Bar for Size #2: 077700299A

Strike and Cam Bar Options

Strike

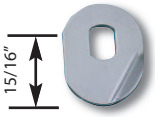

Fig. 0777 #0 Cam Bar

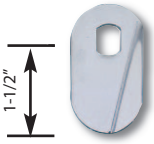

Fig. 0777 #1 Cam Bar

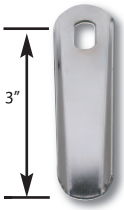

Fig. 0777 #2 Cam Bar

Cupboard Bolt, Catch, Turn, and Latch

Cupboard Bolt

Material: Zinc Alloy with Polymer Slide and Knob
Finish: Chrome Plated
Dimensions: 2-1/8″ x 1-1/2″
Screw Size: #6

Retail Pkg.	OEM Bulk Pkg.
1101DP0CHR	1101000CHR

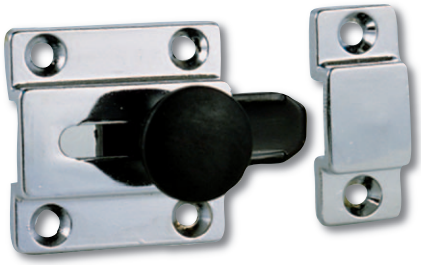

Fig. 1101

Cupboard Catch

Material: Zinc Alloy
Finish: Chrome Plated
Dimensions: 1-1/2″ x 1-7/8″
Screw Size: #6
Features:
- No. 1 Supplied with box strike
- No. 2 Supplied with 3/8″ offset box strike
- Spacer included with 1102DP2CHR package to allow for additional (3/16″) offset

Fig. 1102

Strike Type	Retail Pkg.	OEM Bulk Pkg.
Box	1102DP1CHR	1102001CHR
Offset Box	1102DP2CHR	1102002CHR

3/16″ Spacer for use with #2 Offset Box Strike

PROP 65 WARNING
(Contains Lead)

Cupboard Turn

Material: Zinc Alloy
Finish: Chrome Plated
Dimensions: 2-1/8″ x 2-1/4″
Screw Size: #6

Retail Pkg.
0978DP0CHR

Spare Parts Ordering Information
Strike Plate: 0976000CHR Bevel with Cam: 0984000CHR

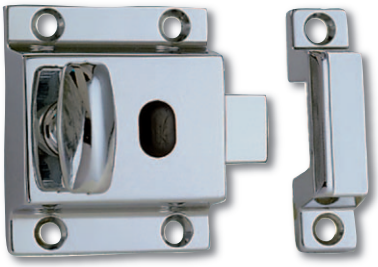

Fig. 0978

Latch with Sliding Lock Button

Material: Zinc Alloy
Finish: Chrome Plated
Dimensions: 2-1/8″ x 2-1/4″
Screw Size: #6

Retail Pkg.
0948DP0CHR

Spare Parts Ordering Information
Strike Plate: 0976000CHR Bevel with Cam: 0984000CHR

Fig. 0948

Cabinet Lock & Latch, Door Knob, and Elbow Catches

Cabinet Flush Lock and Latch

Material: Zinc Alloy
Finish: Chrome Plated
Dimensions: Face Plate: 2-1/4" x 2"
Installation: Installs in 1-5/8" diameter hole
For Door Thickness: 1/2" to 3/4"
Features: Fig. 0921: Lock with 2 keys
Fig. 0922: Latch, non-locking

Fig. 0921 Shown

PROP 65 WARNING (Contains Lead & DINP)

Type	Retail Pkg.	OEM Bulk Pkg.
Lock	0921DP0CHR	0921000CHR
Latch	0922DP0CHR	0922000CHR

Chrome Cam Bar: 0980A
Note: Chrome and Polymer Cam Bars are not interchangeable.

Door Knob

Material: Brass with Stainless Steel Screw
Finish: Chrome Plated
Dimensions: O.D. Knob: 1"
Max. Panel Thickness: 1-1/8"

Fig. 0925

Retail Pkg.	OEM Bulk Pkg.
0925DP0CHR	0925000CHR

PROP 65 WARNING (Contains Lead)

Elbow Catch

Material: Zinc Alloy with Stainless Steel Spring
Finish: Chrome Plated
Dimensions: 1-1/8" x 9/16"
Screw Size: #6

Fig. 1056

Retail Pkg.	OEM Bulk Pkg.
1056DP0CHR	1056000CHR

Elbow Catch

Material: Polymer with Integral Spring
Finish: Black
Dimensions: 1-3/16" x 5/8"
Screw Size: #6

Fig. 1021

Retail Pkg.*	OEM Bulk Pkg.
1021DP0BLK	1021000BLK

*Sold in Pairs

Ring Catch and Pulls

Flush Ring Catch

Material: Zinc Alloy with Phosphor Bronze Spring
Finish: Chrome Plated
Dimensions: 2-1/4" x 1-3/8"
Screw Size: #6

Retail Pkg.	OEM Bulk Pkg.
1051DP0CHR	1051000CHR

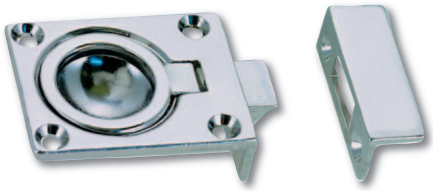

Fig. 1051

Flush Pull

Material: Zinc Alloy and Stainless Steel
Finish: Chrome Plated
Dimensions: Face Plate: 3-11/16" x 1-11/16"
Depth: 7/16"
Screw Size: #6

Retail Pkg.	OEM Bulk Pkg.
1110DP0CHR	1110000CHR

Fig. 1110

Flush Pull

Material: Polymer
Finish: Black, White, or Ivory
Dimensions: Face Plate: 2-1/4" x 2-1/4"
Depth: 15/16"
Installation: Installs in a 1-3/4" Diameter Hole
Screw Size: #6

NEW COLOR
Ivory

Fig. 1016
Ivory

Color	Retail Pkg.	OEM Bulk Pkg.
Black	1016DP0BLK	1016000BLK
White	1016DP0WHT	1016000WHT
Ivory	1016DP0IVR	1016000IVR

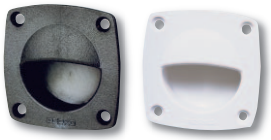

Black White

Pull

Material: Zinc Alloy
Finish: Chrome Plated
Dimensions: Width Overall: 3-7/16"
Width Inside: 2-5/16"
Screw Size: #6

Retail Pkg.
0958DP0CHR

Fig. 0958

Flush Pulls

Flush Ring Pull

Material: Zinc Alloy
Finish: Chrome Plated
Dimensions: 1-3/4″ x 1-3/8″
Screw Size: #6

Retail Pkg.	OEM Bulk Pkg.
0841DP0CHR	0841000CHR

Fig. 0841

Flush Ring Pull

Material: Zinc Alloy
Finish: Chrome Plated
Dimensions: No. 1 O.D. Face Plate: 1-5/8″
No. 2 O.D. Face Plate: 2″
Screw Size: #6

Retail Pkg.	OEM Bulk Pkg.
1232DP1CHR	1232001CHR
1232DP2CHR	1232002CHR

Fig. 1232

Flush Ring Pull

Material: Bronze
Finish: Chrome Plated
Dimensions: 2-9/16″ x 2″
Screw Size: #8

Retail Pkg.	OEM Bulk Pkg.
1103DP0CHR	1103000CHR

Fig. 1103

PROP 65 WARNING (Contains Lead)

Flush Lifting Pull

Material: Bronze
Finish: Chrome Plated
Dimensions: 2-5/8″ x 2″
Screw Size: #8

Retail Pkg.	OEM Bulk Pkg.
0575DP0CHR	0575000CHR

Fig. 0575

PROP 65 WARNING (Contains Lead)

Pull and Lifting Handles

Flush Lifting Pull

Material: Zinc Alloy and Polymer
Finish: Chrome Plated Body and Black Finishing Flange
Dimensions: Flange: 3/4" x 3-1/4"
Screw Size: #8
Features:
- Spring loaded
- Can be mounted horizontally or vertically

Fig. 1221

Retail Pkg.	OEM Bulk Pkg.
1221DP0CHR	1221000CHR

Flush Lifting Handle

Material: Bronze
Finish: Chrome Plated
Screw Size: #8
Features:
- Size No. 1 has mounting holes Inset on top
- Size No. 2 has all mounting holes at corners

Fig. 0776 Size #1

Fig. 0776 Size #2

Dimensions Face Plate	Dimensions Inside Handle	Dealer Pkg.	OEM Bulk Pkg.
3" x 2-1/4"	1-7/8" x 1"	0776DP1CHR	0776001CHR
3-3/4" x 2-3/4"	2-3/16" x 1-3/16"	0776DP2CHR	0776002CHR

PROP 65 WARNING
(Contains Lead)

Flush Lifting Handle

Material: Zinc Alloy
Finish: Chrome Plated
Dimensions: Face Plate: 3" x 2-1/4"
Inside Handle: 1-7/8" x 1"
Screw Size: #8

Fig. 1220

Retail Pkg.	OEM Bulk Pkg.
1220DP0CHR	1220000CHR

Door & Window Stop, Handle, and Angled Fastener

Sliding Window Stops

Material: Zinc Alloy and Polymer
Finish: Chrome Plated with Black Cover on Stopping Plate
Dimensions: Mounting Plate: 1-7/8" x 3/4"
Stopping Plate Length: 1-1/2"
Screw Size: #8

Fig. 0935

PROP 65 WARNING (Contains DINP)

Retail Pkg.	OEM Bulk Pkg.
0935DP0CHR	0935000CHR

Sliding Door Stop

Material: Heavy Gauge Extruded Brass and Polymer
Finish: Chrome Plated with Black Cover on Stopping Plate
Dimensions: Mounting Plate: 1-1/2" x 3/4"
Stopping Plate Length: 2"
Screw Size: #10

Fig. 0966

PROP 65 WARNING (Contains Lead & DINP)

Retail Pkg.	OEM Bulk Pkg.
0966DP0CHR	0966000CHR

Sliding Window Handle

Material: Stainless Steel
Finish: Plain
Dimensions: Length Overall: 3"
For Glass Thickness: 1/4"

Fig. 0954

Retail Pkg.
0954DP0STS

Removable Angled Fastener

Material: Brass and Polymer Knob with Stainless Steel Stud
Finish: Chrome Plated and Black
Dimensions: Length Angle: 1-3/8"
Width Angle: 1"
Screw Size: #8
Features: Ideal for table legs

Fig. 0719

PROP 65 WARNING (Contains Lead)

Retail Pkg.	OEM Bulk Pkg.
0719DP0CHR	0719000CHR

Spare Parts Ordering Information
Knob: 071900099A
Single Bracket: 071900099B
Flat Plate: 071900099C

Table Brackets and Utility Hooks

Table Brackets - For Removable Tables

Supplied in Sets of Two Brackets and Two Wall Plates

Material:	Brass
Finish:	Chrome Plated
Dimensions:	Angle Bracket: 2-3/4″ x 1-11/16″
	Wall Plate: 3-3/8″ x 2″
Screw Size:	#10

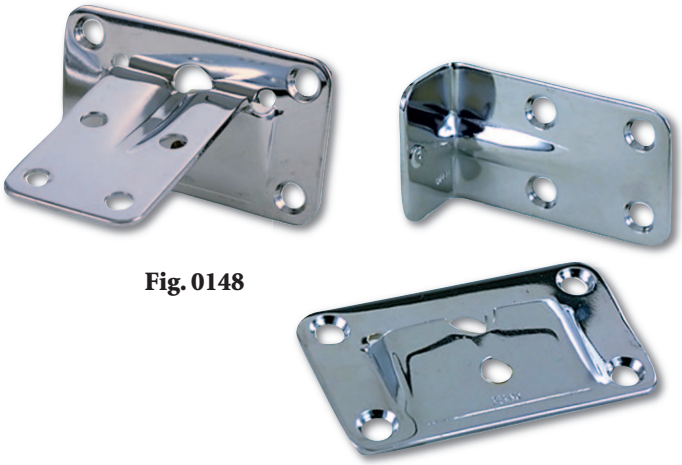

Fig. 0148

Retail Pkg.	OEM Bulk Pkg.
0148DP0CHR	0148000CHR

Sold in Sets

Spare Parts Ordering Information
Pair of Angle Brackets: 014800099A
Pair of Wall Plates: 014800099B

PROP 65 WARNING
(Contains Lead)

Utility Hook

Material:	Zinc Alloy
Finish:	Chrome Plated
Dimensions:	Overall Width: 3″, Projection: 3/4″
	Base Width: 1″
Screw Size:	#6

Fig. 1106

Retail Pkg.	OEM Bulk Pkg.
1106DP0CHR	1106000CHR

Utility Hook

Material:	Zinc Alloy
Finish:	Chrome Plated
Screw Size:	#6

Fig. 0975

Projection	Base Width	Retail Pkg.	OEM Bulk Pkg.
2″	1-1/8″	0975DP1CHR	0975001CHR
3″	1-1/4″	0975DP2CHR	0975002CHR

Utility Hook

Material:	Zinc Alloy
Finish:	Chrome Plated
Dimensions:	Projection: 1-3/8″
	Base Width: 1-1/8″
Screw Size:	#6

Fig. 0610

Retail Pkg.	OEM Bulk Pkg.
0610DP0CHR	0610000CHR

Utility Hook, Boat Cover Sockets, and Fasteners

Utility or Lashing Hook

Material:	Zinc Alloy
Finish:	Chrome Plated
Dimensions:	Length: 15/16", Width: 1/2"
	Inside Hook: 1/4"
Screw Size:	#6

Retail Pkg.*	OEM Bulk Pkg.
1249DP0CHR	1249000CHR

*Sold 5 pcs. per card

Fig. 1249

Boat Cover Sockets

Will Accommodate 3/8" Wood or Polymer Battens Up To 1-3/4" Long

Material:	Zinc Alloy
Finish:	Chrome Plated
Dimensions:	Length: 3-1/4", Width: 5/8"
	Opening: 1-7/8" x 7/16"
Screw Size:	#6

Retail Pkg.
0578DP0CHR

Sold in Pairs

Fig. 0578

"Durable Type" Fasteners

Material:	Figs. 0896, 0898, 0901 & 0907: Brass
	Fig. 0869: Stainless Steel, 5/8" Self Tapping Screw
Finish:	Figs. 0896, 0898, 0901 & 0907: Nickel Plated
Use:	• For Canvas to Surface, Use Figs. 0869, 0896 and 0898
	• For Canvas to Canvas, Use Figs. 0896, 0898, 0901 & 0907

Stud
Fig. 0869

Button
Fig. 0896

Socket
Fig. 0898

Description	Standard Pkg.
Stud	0869000STS
Stud	0901000NKL
Socket	0898000NKL
Button	0896000NKL
Eyelet	0907000NKL

Sold in boxes of 100 pcs.

Stud
Fig. 0901

Eyelet
Fig. 0907

PROP 65 WARNING
(Contains Lead)

Curtain Fasteners

Material:	Brass
Finish:	Nickel Plated

Washer
Fig. 0997

Eyelet
Fig. 0996

Description	Standard Pkg.
Flanged Stud	0994000NKL
Eyelet	0996000NKL
Washer	0997000NKL

Sold in boxes of 100 pcs.

Flanged Stud
Fig. 0994

PROP 65 WARNING
(Contains Lead)